Leica TS16

User Manual
Version 4.1
English

- when it has to be **right**

Leica Geosystems

PART OF HEXAGON

Introduction

Purchase

Congratulations on the purchase of the Leica TS16.

This manual contains important safety directions as well as instructions for setting up the product and operating it. Refer to 1 Safety Directions for further information.

Read carefully through the User Manual before you switch on the product.

☞

The content of this document is subject to change without prior notice. Ensure that the product is used in accordance with the latest version of this document.

Updated versions are available for download at the following Internet address:

https://myworld.leica-geosystems.com > **myDownloads**.

Product identification

The model and serial number of your product are indicated on the type plate.

Always refer to this information when you need to contact your agency or Leica Geosystems authorised service centre.

Trademarks

- Windows® is a registered trademark of Microsoft Corporation in the United States and other countries
- *Bluetooth*® is a registered trademark of Bluetooth SIG, Inc.
- SD Logo is a trademark of SD-3C, LLC.

All other trademarks are the property of their respective owners.

Validity of this manual

This manual applies to the TS16.

Available documentation

Name	Description/Format		
TS16 Quick Guide	Provides an overview of the product together with technical data and safety directions. Intended as a quick reference guide.	✓	✓
TS16 User Manual	All instructions required in order to operate the product to a basic level are contained in the User Manual. Provides an overview of the product together with technical data and safety directions.	-	✓
Name	**Description/Format**		
Captivate Technical Reference Manual	Overall comprehensive guide to the product and apps. Included are detailed descriptions of special software/hardware settings and software/hardware functions intended for technical specialists.	-	✓

Refer to the following resources for documentation/software:

- the Leica Captivate USB documentation card
- https://myworld.leica-geosystems.com

Video tutorials are available on:

http://www.leica-geosystems.com/captivate-howto

Leica Geosystems address book

On the last page of this manual, you can find the address of Leica Geosystems headquarters. For a list of regional contacts, please visit **http://leica-geosystems.com/contact-us/sales_support**.

myWorld@Leica Geosystems (**https://myworld.leica-geosystems.com**) offers a wide range of services, information and training material.

With direct access to myWorld, you are able to access all relevant services whenever it is convenient for you.

Service	Description
myProducts	Add all products that you and your company own and explore your world of Leica Geosystems: View detailed information on your products and update your products with the latest software and keep up-to-date with the latest documentation.
myService	View the current service status and full service history of your products in Leica Geosystems service centres. Access detailed information on the services performed and download your latest calibration certificates and service reports.
mySupport	Create new support requests for your products that will be answered by your local Leica Geosystems Support Team. View the complete history of your support requests and view detailed information on each request in case you want to refer to previous support requests.
myLearning	Welcome to the home of Leica Geosystems online learning! There are numerous online courses – available to all customers with products that have valid CCPs (Customer Care Packages).
myTrustedServices	Add your subscriptions and manage users for Leica Geosystems Trusted Services, the secure software services, that assist you to optimise your workflow and increase your efficiency.
mySmartNet	HxGN SmartNet is the GNSS correction service built on the world's largest reference station network, enabling GNSS-capable devices to quickly determine precise positions in the range of one to two centimetre accuracy. The service is provided 24/7 by a highly-available infrastructure and professional support team with more than 10 years of experience reliably delivering the service.

Service	Description
myDownloads	Downloads of software, manuals, tools, training material and news for Leica Geosystems products.

Table of Contents

1 Safety Directions 7

1.1 General Introduction 7
1.2 Definition of Use 8
1.3 Limits of Use 8
1.4 Responsibilities 8
1.5 Hazards of Use 9
1.6 Laser Classification 12
1.6.1 General 12
1.6.2 Distancer, Measurements with Reflectors 13
1.6.3 Distancer, Measurements without Reflectors 13
1.6.4 Red Laser Pointer 15
1.6.5 Automatic Target Aiming (ATRplus) 17
1.6.6 PowerSearch (PS) 17
1.6.7 Electronic Guide Light (EGL) 18
1.6.8 Laser Plummet 18
1.6.9 AutoHeight Laser Plummet 19
1.6.10 Laser Guide 20
1.7 Electromagnetic Compatibility (EMC) 22
1.8 FCC Statement, Applicable in U.S. 23
1.9 ISED Statements (EN/FR), Applicable in Canada 25

2 Description of the System 26

2.1 System Components 26
2.2 System Concept 28
2.2.1 Software Concept 28
2.2.2 Power Concept 29
2.2.3 Data Storage Concept 30
2.3 Container Contents 31
2.4 Instrument Components 35

3 User Interface 38

3.1 Keyboard 38
3.2 Operating Principles 39

4 Operation 41

4.1 Setting Up the TS Instrument 41
4.2 Setting Up SmartStation 42
4.3 Setting Up SmartPole 43
4.4 Setting up for Remote Control (with the RadioHandle) 43
4.5 Setting up for Remote Control (with the TCPS29/30) 43
4.6 Fixing the Field Controller to a Holder and Pole 44
4.7 Fixing the CS35 Tablet to a Holder and Pole 46
4.8 Connecting to a Personal Computer 47
4.9 Power Functions 50
4.10 Batteries 51
4.10.1 Operating Principles 51
4.10.2 Battery for the TS Instrument 51
4.11 Working with the Memory Device 52
4.12 LED Indicators 53
4.13 Guidelines for Correct Results 54

5 Check & Adjust 56

5.1 Overview 56
5.2 Preparation 57

5.3 Combined Adjustment (l, t, i, c and ATRplus) 58
5.4 Tilting Axis Adjustment (a) 60
5.5 Adjusting the Circular Level of the Instrument and Tribrach 62
5.6 Adjusting the Circular Level of the Prism Pole 63
5.7 Inspecting the Laser Plummet of the Instrument 63
5.8 Adjusting the Laser Guide 64
5.9 Servicing the Tripod 66

6 Care and Transport 67

6.1 Transport 67
6.2 Storage 67
6.3 Cleaning and Drying 68
6.4 Maintenance 68

7 Technical Data 69

7.1 Angle Measurement 69
7.2 Distance Measurement with Reflectors 69
7.3 Distance Measurement without Reflectors 70
7.4 Distance Measurement - Long Range (LO mode) 71
7.5 Automatic Target Aiming (ATRplus) 72
7.6 PowerSearch (PS) 73
7.7 LOC8 Theft Deterrence and Location Device (optional) 74
7.8 Overview Camera 74
7.9 SmartStation 74
7.9.1 SmartStation Accuracy 74
7.9.2 SmartStation Dimensions 75
7.10 Laser Guide Technical Data 76
7.11 Conformity to National Regulations 77
7.11.1 TS16 77
7.11.2 RadioHandle 78
7.11.3 LOC8 Theft Deterrence and Location Device (optional) 78
7.11.4 Dangerous Goods Regulations 79
7.12 General Technical Data of the Product 80
7.13 Scale Correction 86
7.14 Reduction Formulas 89

8 Software Licence Agreement/Warranty 92

1 Safety Directions

1.1 General Introduction

Description

The following directions enable the person responsible for the product, and the person who actually uses the equipment, to anticipate and avoid operational hazards.

The person responsible for the product must ensure that all users understand these directions and adhere to them.

About warning messages

Warning messages are an essential part of the safety concept of the instrument. They appear wherever hazards or hazardous situations can occur.

Warning messages...

- make the user alert about direct and indirect hazards concerning the use of the product.
- contain general rules of behaviour.

For the users' safety, all safety instructions and safety messages shall be strictly observed and followed! Therefore, the manual must always be available to all persons performing any tasks described here.

DANGER, **WARNING**, **CAUTION** and **NOTICE** are standardised signal words for identifying levels of hazards and risks related to personal injury and property damage. For your safety, it is important to read and fully understand the following table with the different signal words and their definitions! Supplementary safety information symbols may be placed within a warning message as well as supplementary text.

Type	Description
⚠ **DANGER**	Indicates an imminently hazardous situation which, if not avoided, will result in death or serious injury.
⚠ **WARNING**	Indicates a potentially hazardous situation or an unintended use which, if not avoided, could result in death or serious injury.
⚠ **CAUTION**	Indicates a potentially hazardous situation or an unintended use which, if not avoided, may result in minor or moderate injury.
NOTICE	Indicates a potentially hazardous situation or an unintended use which, if not avoided, may result in appreciable material, financial and environmental damage.
☞	Important paragraphs which must be adhered to in practice as they enable the product to be used in a technically correct and efficient manner.

1.2 Definition of Use

Intended use

- Measuring horizontal and vertical angles
- Measuring distances
- Recording measurements
- Capturing and recording images
- Automatic target search, recognition and tracking
- Visualising the aiming direction and vertical axis
- Remote control of product
- Data communication with external appliances
- Measuring raw data and computing coordinates using carrier phase and code signal from GNSS satellites (GNSS systems)
- Recording GNSS and point related data
- Computing with software

Reasonably foreseeable misuse

- Use of the product without instruction
- Use outside of the intended use and limits
- Disabling safety systems
- Removal of hazard notices
- Opening the product using tools, for example screwdriver, unless this is permitted for certain functions
- Modification or conversion of the product
- Use after misappropriation
- Use of products with recognisable damage or defects
- Use with accessories from other manufacturers without the prior explicit approval of Leica Geosystems
- Inadequate safeguards at the working site
- Aiming directly into the sun

1.3 Limits of Use

Environment

Suitable for use in an atmosphere appropriate for permanent human habitation. Not suitable for use in aggressive or explosive environments.

⚠WARNING

Working in hazardous areas, or close to electrical installations or similar situations

Life Risk.

Precautions:

- ▸ Local safety authorities and safety experts must be contacted by the person responsible for the product before working in such conditions.

1.4 Responsibilities

Manufacturer of the product

Leica Geosystems AG, CH-9435 Heerbrugg, hereinafter referred to as Leica Geosystems, is responsible for supplying the product, including the User Manual and original accessories, in a safe condition.

Person responsible for the product

The person responsible for the product has the following duties:

- To understand the safety instructions on the product and the instructions in the User Manual
- To ensure that it is used in accordance with the instructions
- To be familiar with local regulations relating to safety and accident prevention
- To inform Leica Geosystems immediately if the product and the application become unsafe
- To ensure that the national laws, regulations and conditions for the operation of the product are respected

1.5 Hazards of Use

NOTICE

Dropping, misusing, modifying, storing the product for long periods or transporting the product

Watch out for erroneous measurement results.

Precautions:

- Periodically carry out test measurements and perform the field adjustments indicated in the User Manual, particularly after the product has been subjected to abnormal use as well as before and after important measurements.

DANGER

Risk of electrocution

Because of the risk of electrocution, it is dangerous to use poles, levelling staffs and extensions in the vicinity of electrical installations such as power cables or electrical railways.

Precautions:

- Keep at a safe distance from electrical installations. If it is essential to work in this environment, first contact the safety authorities responsible for the electrical installations and follow their instructions.

NOTICE

Remote control of product

With the remote control of products, it is possible that extraneous targets will be picked out and measured.

Precautions:

- When measuring in remote control mode, always check your results for plausibility.

⚠WARNING

Lightning strike

If the product is used with accessories, for example masts, staffs, poles, you may increase the risk of being struck by lightning.

Precautions:

- Do not use the product in a thunderstorm.

⚠WARNING

Distraction/loss of attention

During dynamic applications, for example stakeout procedures, there is a danger of accidents occurring if the user does not pay attention to the environmental conditions around, for example obstacles, excavations or traffic.

Precautions:

- The person responsible for the product must make all users fully aware of the existing dangers.

⚠WARNING

Inadequate securing of the working site

This can lead to dangerous situations, for example in traffic, on building sites and at industrial installations.

Precautions:

- Always ensure that the working site is adequately secured.
- Adhere to the regulations governing safety, accident prevention and road traffic.

⚠CAUTION

Pointing product toward the sun

Be careful when pointing the product toward the sun, because the telescope functions as a magnifying glass and can injure your eyes and/or cause damage inside the product.

Precautions:

- Do not point the product directly at the sun.

⚠CAUTION

Not properly secured accessories

If the accessories used with the product are not properly secured and the product is subjected to mechanical shock, for example blows or falling, the product may be damaged or people can sustain injury.

Precautions:

- When setting up the product, make sure that the accessories are correctly adapted, fitted, secured, and locked in position.
- Avoid subjecting the product to mechanical stress.

⚠WARNING

Inappropriate mechanical influences to batteries

During the transport, shipping or disposal of batteries it is possible for inappropriate mechanical influences to constitute a fire hazard.

Precautions:

- Before shipping the product or disposing it, discharge the batteries by the product until they are flat.
- When transporting or shipping batteries, the person in charge of the product must ensure that the applicable national and international rules and regulations are observed.
- Before transportation or shipping, contact your local passenger or freight transport company.

⚠WARNING

Exposure of batteries to high mechanical stress, high ambient temperatures or immersion into fluids

This can cause leakage, fire or explosion of the batteries.

Precautions:

- Protect the batteries from mechanical influences and high ambient temperatures. Do not drop or immerse batteries into fluids.

⚠WARNING

Short circuit of battery terminals

If battery terminals are short circuited e.g. by coming in contact with jewellery, keys, metallised paper or other metals, the battery can overheat and cause injury or fire, for example by storing or transporting in pockets.

Precautions:

- Make sure that the battery terminals do not come into contact with metallic objects.

⚠WARNING

Improper disposal

If the product is improperly disposed of, the following can happen:

- If polymer parts are burnt, poisonous gases are produced which may impair health.
- If batteries are damaged or are heated strongly, they can explode and cause poisoning, burning, corrosion or environmental contamination.
- By disposing of the product irresponsibly you may enable unauthorised persons to use it in contravention of the regulations, exposing themselves and third parties to the risk of severe injury and rendering the environment liable to contamination.

Precautions:

▸ 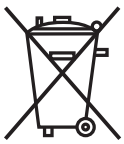

The product must not be disposed with household waste. Dispose of the product appropriately in accordance with the national regulations in force in your country.
Always prevent access to the product by unauthorised personnel.

Product-specific treatment and waste management information can be received from your Leica Geosystems distributor.

⚠WARNING

Improperly repaired equipment

Risk of injuries to users and equipment destruction due to lack of repair knowledge.

Precautions:

▸ Only authorised Leica Geosystems Service Centres are entitled to repair these products.

1.6 Laser Classification

1.6.1 General

General

The following chapters provide instructions and training information about laser safety according to international standard IEC 60825-1 (2014-05) and technical report IEC TR 60825-14 (2004-02). The information enables the person responsible for the product and the person who actually uses the equipment, to anticipate and avoid operational hazards.

☞ According to IEC TR 60825-14 (2004-02), products classified as laser class 1, class 2 and class 3R do not require:

- laser safety officer involvement,
- protective clothes and eyewear,
- special warning signs in the laser working area

if used and operated as defined in this User Manual due to the low eye hazard level.

☞ National laws and local regulations could impose more stringent instructions for the safe use of lasers than IEC 60825-1 (2014-05) and IEC TR 60825-14 (2004-02).

1.6.2 Distancer, Measurements with Reflectors

General

The EDM module built into the product produces a visible laser beam which emerges from the telescope objective.

The laser product described in this section is classified as laser class 1 in accordance with:

- IEC 60825-1 (2014-05): “Safety of laser products”

These products are safe under reasonably foreseeable conditions of operation and are not harmful to the eyes provided that the products are used and maintained in accordance with this User Manual.

Description	Value
Wavelength	658 nm
Pulse duration	800 ps
Pulse repetition frequency (PRF)	100 MHz
Maximum average radiant power	0.33 mW
Beam divergance	1.5 mrad × 3 mrad

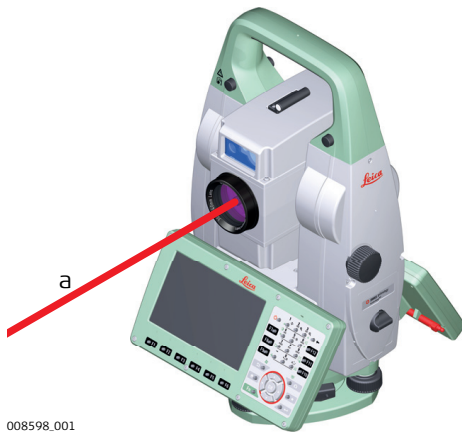

a Laser beam

1.6.3 Distancer, Measurements without Reflectors

General

The EDM module built into the product produces a visible laser beam which emerges from the telescope objective.

The laser product described in this section is classified as laser class 3R in accordance with:

- IEC 60825-1 (2014-05): “Safety of laser products”

Direct intrabeam viewing may be hazardous (low eye hazard level), in particular for deliberate ocular exposure. The beam may cause dazzle, flash-blindness and after-images, particularly under low ambient light conditions. The risk of injury for laser class 3R products is limited because of:

a) unintentional exposure would rarely reflect worst case conditions of (e.g.) beam alignment with the pupil, worst case accommodation,
b) inherent safety margin in the maximum permissible exposure to laser radiation (MPE)
c) natural aversion behaviour for exposure to bright light for the case of visible radiation.

Description	Value R30 R500 R1000
Wavelength	658 nm
Maximum average radiant power	4.8 mW
Pulse duration	800 ps
Pulse repetition frequency (PRF)	100 MHz
Beam divergence	0.2 mrad x 0.3 mrad
NOHD (Nominal Ocular Hazard Distance) @ 0.25 s	44 m / 144 ft

⚠CAUTION

Class 3R laser products

From a safety perspective, class 3R laser products should be treated as potentially hazardous.

Precautions:

- Prevent direct eye exposure to the beam.
- Do not direct the beam at other people.

⚠CAUTION

Reflected beams aimed at reflecting surfaces

Potential hazards are not only related to direct beams but also to reflected beams aimed at reflecting surfaces such as prisms, windows, mirrors, metallic surfaces, etc.

Precautions:

- Do not aim at areas that are essentially reflective, such as a mirror, or which could emit unwanted reflections.
- Do not look through or beside the optical sight at prisms or reflecting objects when the laser is switched on, in laser pointer or distance measurement mode. Aiming at prisms is only permitted when looking through the telescope.

Labelling

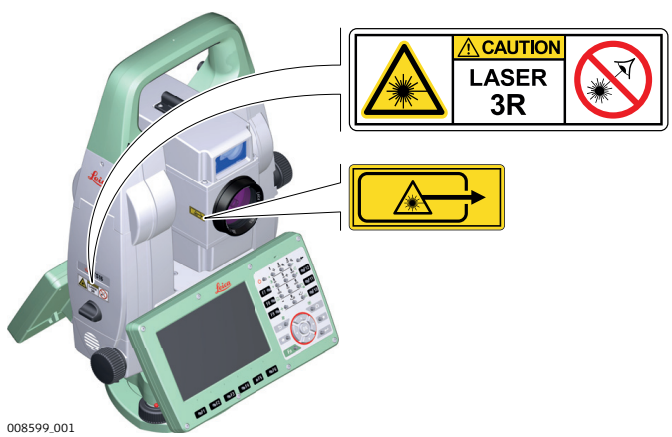

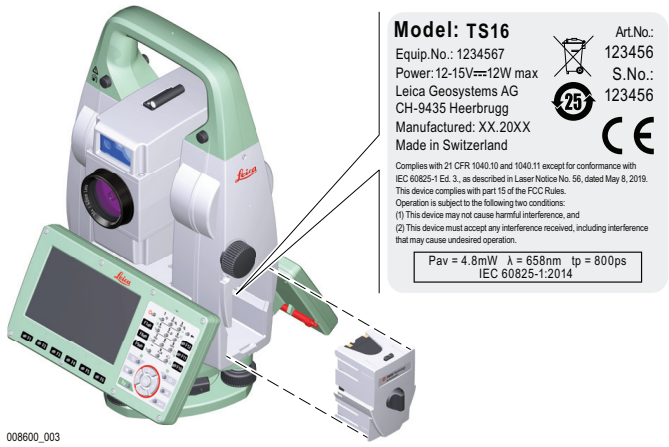

1.6.4 Red Laser Pointer

General

The laser pointer built into the product produces a visible red laser beam which emerges from the telescope objective.

The laser product described in this section is classified as laser class 3R in accordance with:

- IEC 60825-1 (2014-05): "Safety of laser products"

Direct intrabeam viewing may be hazardous (low eye hazard level), in particular for deliberate ocular exposure. The beam may cause dazzle, flash-blindness and after-images, particularly under low ambient light conditions. The risk of injury for laser class 3R products is limited because of:

a) unintentional exposure would rarely reflect worst case conditions of (e.g.) beam alignment with the pupil, worst case accommodation,
b) inherent safety margin in the maximum permissible exposure to laser radiation (MPE)
c) natural aversion behaviour for exposure to bright light for the case of visible radiation.

Description	Value R30 R500 R1000
Wavelength	658 nm
Maximum average radiant power	4.8 mW
Pulse duration	800 ps
Pulse repetition frequency (PRF)	100 MHz
Beam divergence	0.2 mrad x 0.3 mrad
NOHD (Nominal Ocular Hazard Distance) @ 0.25 s	44 m / 144 ft

☞ R30 is only available for TS16G.

⚠CAUTION

Class 3R laser products

From a safety perspective, class 3R laser products should be treated as potentially hazardous.

Precautions:

- Prevent direct eye exposure to the beam.
- Do not direct the beam at other people.

⚠CAUTION

Reflected beams aimed at reflecting surfaces

Potential hazards are not only related to direct beams but also to reflected beams aimed at reflecting surfaces such as prisms, windows, mirrors, metallic surfaces, etc.

Precautions:

- Do not aim at areas that are essentially reflective, such as a mirror, or which could emit unwanted reflections.
- Do not look through or beside the optical sight at prisms or reflecting objects when the laser is switched on, in laser pointer or distance measurement mode. Aiming at prisms is only permitted when looking through the telescope.

Labelling

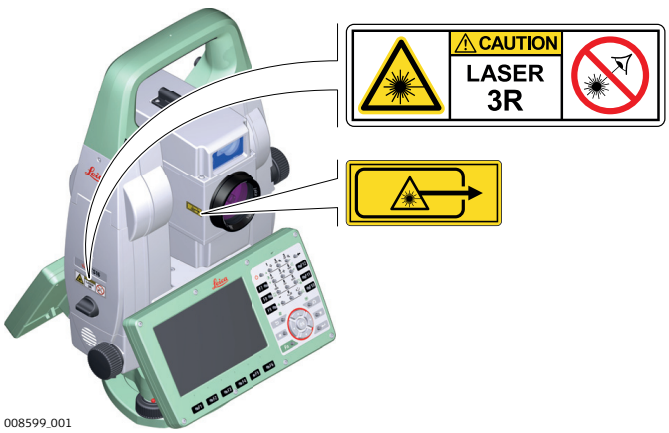

008599_001

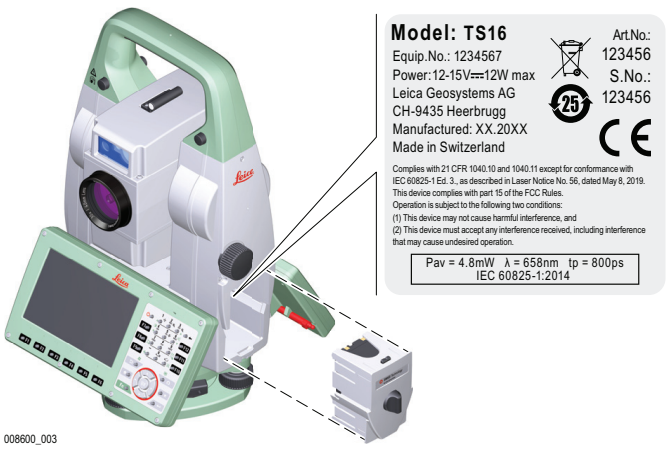

008600_003

1.6.5 Automatic Target Aiming (ATRplus)

General

The Automatic Target Aiming built into the product produces an invisible laser beam which emerges from the telescope objective.

The laser product described in this section is classified as laser class 1 in accordance with:

- IEC 60825-1 (2014-05): “Safety of laser products”

These products are safe under reasonably foreseeable conditions of operation and are not harmful to the eyes provided that the products are used and maintained in accordance with this User Manual.

Description	Value
Wavelength	785 nm
Maximum radiant peak power per pulse	10 mW
Pulse duration	≤ 15 ms
Pulse repetition frequency (PRF)	≤ 213 Hz
Beam divergence	25 mrad

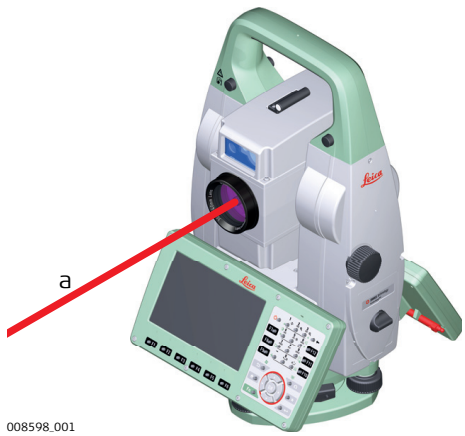

a Laser beam

1.6.6 PowerSearch (PS)

General

The PowerSearch built into the product produces an invisible laser beam which emerges from the front side of the telescope.

The laser product described in this section is classified as laser class 1 in accordance with:

- IEC 60825-1 (2014-05): “Safety of laser products”

These products are safe under reasonably foreseeable conditions of operation and are not harmful to the eyes provided that the products are used and maintained in accordance with this User Manual.

Description	Value
Wavelength	850 nm
Maximum average radiant power	11 mW
Pulse duration	20 ns, 40 ns
Pulse repetition frequency (PRF)	24.4 kHz

Description	Value
Beam divergence	0.4 mrad × 700 mrad

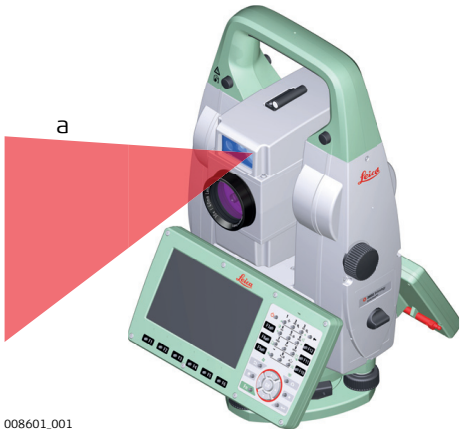

a Laser beam

1.6.7 Electronic Guide Light (EGL)

General

The Electronic Guide Light built into the product produces a visible LED beam which emerges from the front side of the telescope.

☞ The product described in this section, is excluded from the scope of IEC 60825-1 (2014-05): “Safety of laser products”.
The product described in this section, is classified as exempt group in accordance with IEC 62471 (2006-07) and does not pose any hazard provided that the product is used and maintained in accordance with this user manual.

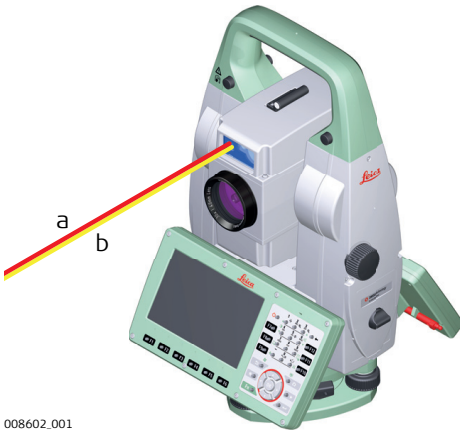

a LED beam red
b LED beam yellow

1.6.8 Laser Plummet

General

The laser plummet built into the product produces a visible red laser beam which emerges from the bottom of the product.

The laser product described in this section is classified as laser class 2 in accordance with:

- IEC 60825-1 (2014-05): “Safety of laser products”

These products are safe for momentary exposures but can be hazardous for deliberate staring into the beam. The beam may cause dazzle, flash-blindness and after-images, particularly under low ambient light conditions.

Description	Value
Wavelength	640 nm
Maximum average radiant power	0.95 mW
Pulse duration	0.1 ms - cw
Pulse repetition frequency (PRF)	1 kHz
Beam divergance	<1.5 mrad

⚠CAUTION

Class 2 laser product

From a safety perspective, class 2 laser products are not inherently safe for the eyes.

Precautions:

- Avoid staring into the beam or viewing it through optical instruments.
- Avoid pointing the beam at other people or at animals.

Labelling

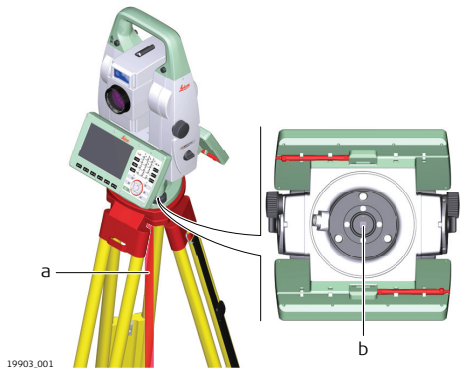

a Laser beam
b Exit for laser beam

1.6.9 AutoHeight Laser Plummet

General

The laser plummet built into the product produces a visible red laser beam which emerges from the bottom of the product.

The laser product described in this section is classified as laser class 2 in accordance with:

- IEC 60825-1 (2014-05): "Safety of laser products"

These products are safe for momentary exposures but can be hazardous for deliberate staring into the beam. The beam may cause dazzle, flash-blindness and after-images, particularly under low ambient light conditions.

Description	Value
Wavelength	640 nm
Maximum average radiant power	0.95 mW
Pulse duration	<1 ns
Pulse repetition frequency (PRF)	320 MHz

Description	Value
Beam divergance	<1.5 mrad

⚠CAUTION

Class 2 laser product

From a safety perspective, class 2 laser products are not inherently safe for the eyes.

Precautions:

- Avoid staring into the beam or viewing it through optical instruments.
- Avoid pointing the beam at other people or at animals.

Labelling

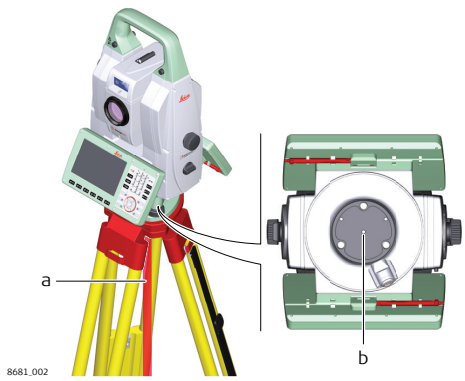

a Laser beam
b Exit for laser beam

1.6.10 Laser Guide

General

The Laser Guide built into the TS16 G instrument produces a visible red laser beam which emerges from the front side of the telescope.

The laser product described in this section is classified as laser class 3R in accordance with:

- IEC 60825-1 (2014-05): "Safety of laser products"

Direct intrabeam viewing may be hazardous (low eye hazard level), in particular for deliberate ocular exposure. The beam may cause dazzle, flash-blindness and after-images, particularly under low ambient light conditions. The risk of injury for laser class 3R products is limited because of:

a) unintentional exposure would rarely reflect worst case conditions of (e.g.) beam alignment with the pupil, worst case accommodation,
b) inherent safety margin in the maximum permissible exposure to laser radiation (MPE)
c) natural aversion behaviour for exposure to bright light for the case of visible radiation.

Description	Value R30 R1000
Maximum radiant power	4.8 mW c.w.
Wavelength	658 nm
Beam divergence	0.1 mrad

Description	Value R30 R1000
NOHD (Nominal Ocular Hazard Distance) @ 0.25s	120 m

⚠CAUTION

Class 3R laser products

From a safety perspective, class 3R laser products should be treated as potentially hazardous.

Precautions:

- Prevent direct eye exposure to the beam.
- Do not direct the beam at other people.

⚠CAUTION

Reflected beams aimed at reflecting surfaces

Potential hazards are not only related to direct beams but also to reflected beams aimed at reflecting surfaces such as prisms, windows, mirrors, metallic surfaces, etc.

Precautions:

- Do not aim at areas that are essentially reflective, such as a mirror, or which could emit unwanted reflections.
- Do not look through or beside the optical sight at prisms or reflecting objects when the laser is switched on, in laser pointer or distance measurement mode. Aiming at prisms is only permitted when looking through the telescope.

Labelling

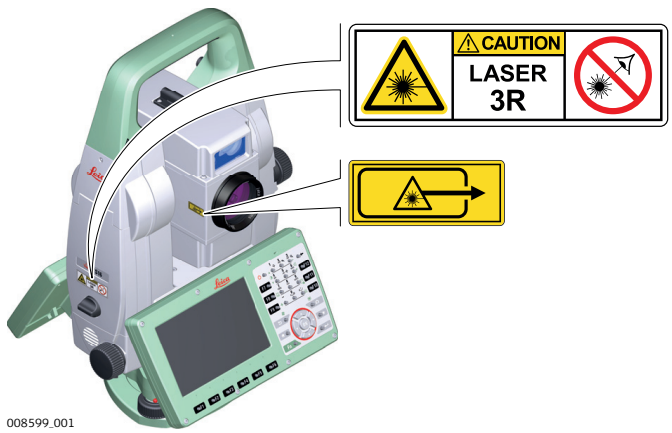

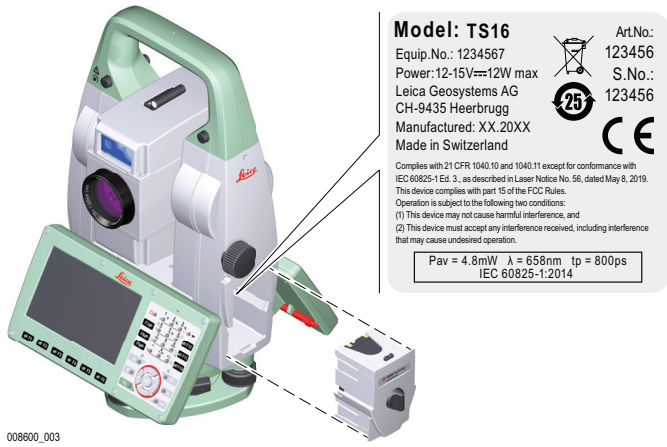

1.7 Electromagnetic Compatibility (EMC)

Description

The term Electromagnetic Compatibility is taken to mean the capability of the product to function smoothly in an environment where electromagnetic radiation and electrostatic discharges are present, and without causing electromagnetic disturbances to other equipment.

⚠WARNING

Electromagnetic radiation

Electromagnetic radiation can cause disturbances in other equipment.

Precautions:

- Although the product meets the strict regulations and standards which are in force in this respect, Leica Geosystems cannot completely exclude the possibility that other equipment may be disturbed.

⚠CAUTION

Use of the product with accessories from other manufacturers. For example field computers, personal computers or other electronic equipment, non-standard cables or external batteries

This may cause disturbances in other equipment.

Precautions:

- Use only the equipment and accessories recommended by Leica Geosystems.
- When combined with the product, they meet the strict requirements stipulated by the guidelines and standards.
- When using computers, two-way radios or other electronic equipment, pay attention to the information about electromagnetic compatibility provided by the manufacturer.

⚠CAUTION

Intense electromagnetic radiation. For example, near radio transmitters, transponders, two-way radios or diesel generators

Although the product meets the strict regulations and standards which are in force in this respect, Leica Geosystems cannot completely exclude the possibility that function of the product may be disturbed in such an electromagnetic environment.

Precautions:

- Check the plausibility of results obtained under these conditions.

⚠CAUTION

Electromagnetic radiation due to improper connection of cables

If the product is operated with connecting cables attached at only one of their two ends, for example external supply cables, interface cables, the permitted level of electromagnetic radiation may be exceeded and the correct functioning of other products may be impaired.

Precautions:

- While the product is in use, connecting cables, for example product to external battery, product to computer, must be connected at both ends.

⚠WARNING

Use of product with radio or digital cellular phone devices

Electromagnetic fields can cause disturbances in other equipment, in installations, in medical devices, for example pacemakers or hearing aids and in aircrafts. Electromagnetic fields can also affect humans and animals.

Precautions:

- Although the product meets the strict regulations and standards which are in force in this respect, Leica Geosystems cannot completely exclude the possibility that other equipment can be disturbed or that humans or animals can be affected.
- Do not operate the product with radio or digital cellular phone devices in the vicinity of filling stations or chemical installations, or in other areas where an explosion hazard exists.
- Do not operate the product with radio or digital cellular phone devices near to medical equipment.
- Do not operate the product with radio or digital cellular phone devices in aircrafts.
- Do not operate the product with radio or digital cellular phone devices for long periods with the product immediately next to your body.

1.8 FCC Statement, Applicable in U.S.

☞ The greyed paragraph below is only applicable for products without radio.

⚠WARNING

This equipment has been tested and found to comply with the limits for a Class B digital device, pursuant to part 15 of the FCC rules.

These limits are designed to provide reasonable protection against harmful interference in a residential installation.

This equipment generates, uses and can radiate radio frequency energy and, if not installed and used in accordance with the instructions, may cause harmful interference to radio communications. However, there is no guarantee that interference will not occur in a particular installation.

If this equipment does cause harmful interference to radio or television reception, which can be determined by turning the equipment off and on, the user is encouraged to try to correct the interference by one or more of the following measures:

- Reorient or relocate the receiving antenna.
- Increase the separation between the equipment and the receiver.
- Connect the equipment into an outlet on a circuit different from that to which the receiver is connected.
- Consult the dealer or an experienced radio/TV technician for help.

⚠CAUTION

Changes or modifications not expressly approved by Leica Geosystems for compliance could void the user's authority to operate the equipment.

Labelling TS16

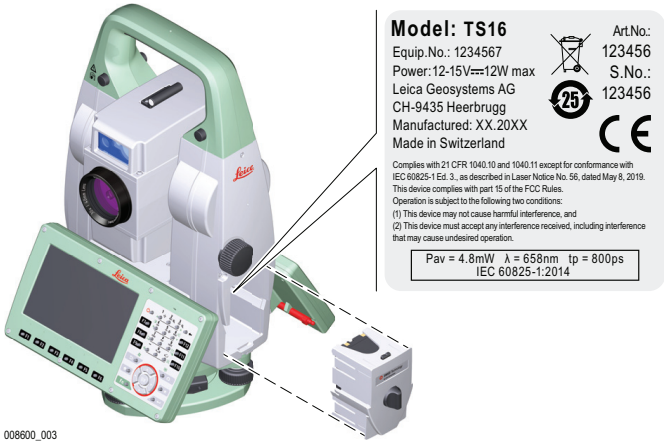

Labelling internal battery GEB212, GEB222

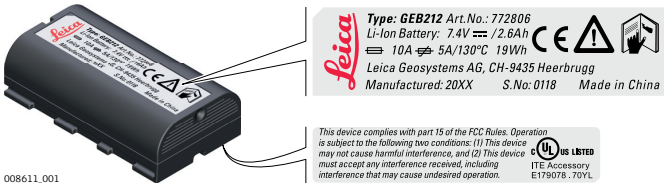

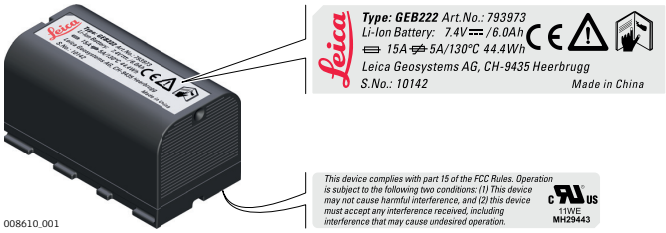

Labelling RadioHandle

RH17

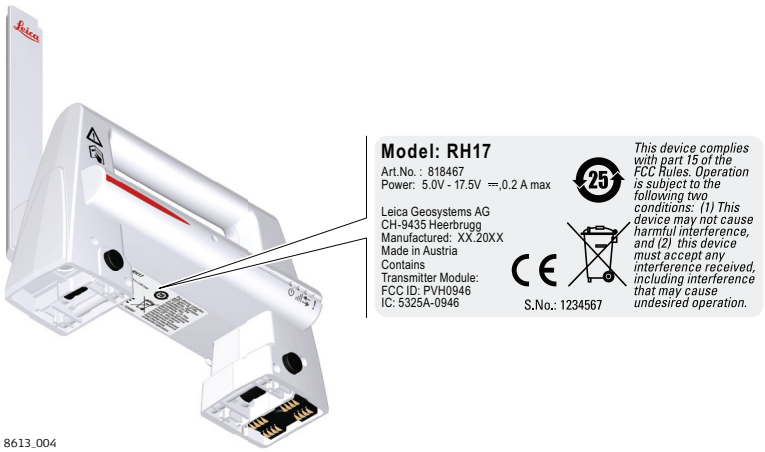

1.9 ISED Statements (EN/FR), Applicable in Canada

⚠WARNING

This Class (B) digital apparatus complies with Canadian ICES-003.
Cet appareil numérique de la classe (B) est conforme à la norme NMB-003 du Canada.

Canada Compliance Statement

This device contains licence-exempt transmitter(s)/receiver(s) that comply with Innovation, Science and Economic Development Canada's licence-exempt RSS(s). Operation is subject to the following two conditions:

1. This device may not cause interference.
2. This device must accept any interference, including interference that may cause undesired operation of the device.

Canada Déclaration de Conformité

L'émetteur/récepteur exempt de licence contenu dans le présent appareil est conforme aux CNR d'Innovation, Sciences et Développement économique Canada applicables aux appareils radio exempts de licence. L'exploitation est autorisée aux deux conditions suivantes:

1. L'appareil ne doit pas produire de brouillage;
2. L'appareil doit accepter tout brouillage radioélectrique subi, même si le brouillage est susceptible d'en compromettre le fonctionnement.

2 Description of the System

2.1 System Components

Main components

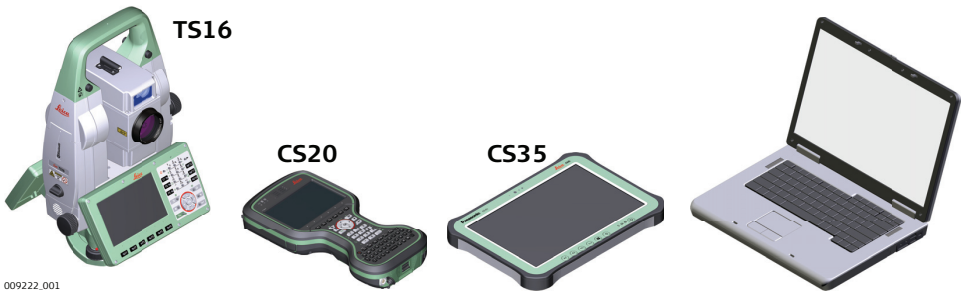

Component	Description
TS16 instrument	• a total station for measuring, calculating and capturing data. • consisting of various models with a range of accuracy classes. • integrated with an add-on GNSS system to form SmartStation. • combined with the multi-purpose CS20 field controller to conduct remote control surveys.
CS20 field controller	A multipurpose field controller allowing the remote control of the TS16 instrument.
CS35 tablet	A tablet allowing the remote control of the TS16 instrument.
Infinity	The office software including a series of help programs which support working with Leica instruments.

Terms and abbreviations

The following terms and abbreviations can be found in this manual:

Term	Description
Remote Mode	The instrument is remote controlled by the field controller or tablet using radio.
EDM	**E**lectronic **D**istance **M**easurement EDM refers to the laser distancer incorporated into the instrument which enables distance measurement. Two measuring modes are available: • **Prism** mode. This mode refers to the ability to measure distances to prisms. It incorporates the long range mode to measure extended distances to prisms. • **Any surface** mode. This mode refers to the ability to measure distances without prisms.
PinPoint	PinPoint refers to the Reflectorless EDM technology which enables an increased measuring range with a smaller laser spot size. Two options are available: R500 and R1000.
EGL	**E**lectronic **G**uide **L**ight

Term	Description
	An EGL fitted to an instrument assists with prism targeting. It consists of two differently coloured flashing lights located in the instrument telescope housing. The person holding the prism can align themselves into the line-of-sight of the instrument.
Laser Guide	• A variant of the TS16 instrument equipped with Automatic Target Aiming. Instruments equipped with the Laser Guide cannot be equipped with PowerSearch (PS) or Guide Light (EGL). • Included in a special compartment in the upper telescope section. • Emits a visible red laser beam used for visualising the line of sight. • Used for guiding tunnel boring machines, monitoring tunnelling progress or visualising bore holes for rock blasting; targeting of inaccessible objects or prohibited surfaces; positioning of objects and inspecting marks on surfaces.
Motorised	Instruments fitted with internal motors, enabling automatic horizontal and vertical turning are referred to as Motorised.
ATRplus	Automatic Target Aiming. ATRplus refers to the instrument sensor which enables the automatic target aiming and locking.
Automated	Instruments fitted with ATRplus are referred to as Automated. ATRplus refers to the instrument sensor which enables the automatic target aiming to a prism. Three automation modes are available with Aim at target: • Manual: no automation and no lock. • Automatic: automatic target aiming to a prism. • LOCK: an already targeted prism is followed automatically.
Overview camera	Overview camera is located in the upper part of the telescope housing and has a fixed focus.
PowerSearch	**P**ower**S**earch refers to the instrument sensor which enables the automatic rapid finding of a prism.
SmartStation	A Leica Viva TS instrument integrated with an add-on GNSS system, comprising hardware and software components, forms a SmartStation. Components of a SmartStation include a SmartAntenna and a SmartAntenna Adapter. A SmartStation provides an additional instrument setup method for determining instrument station coordinates. The GNSS principles and functionality of a SmartStation derive from the principles and functionality of Leica VivaGNSS instruments.

Term	Description
SmartAn-tenna	SmartAntenna with integrated Bluetooth is a component of a SmartStation. It can also be used independently on a pole with a CS20 field controller. Models compatible with a TS16 instrument are GS14/GS16/GS15. Where there are differences between the various models they are clearly described.
RadioHandle	A component of remote mode is the RH16/RH17 Radio-Handle. It is an instrument carry handle with an integrated long range Bluetooth module with attached antenna.
Communica-tion side cover	Communication side cover with integrated Bluetooth, SD card slot, USB port, WLAN and RadioHandle is standard for a TS16 instrument and a component of a SmartStation. In combination with the RH16/RH17 RadioHandle, it is also a component of remote mode.

Available models

Model	TS16 M	TS16 A	TS16 G	TS16 P	TS16 I
Angle measurement	✓	✓	✓	✓	✓
Distance measurement to prism	✓	✓	✓	✓	✓
Distance measurement to any surface (reflectorless)	✓	✓	✓	✓	✓
Motorised	✓	✓	✓	✓	✓
Automatic Target Aiming	-	✓	✓	✓	✓
PowerSearch (PS)	-	-	-	✓	✓
Overview Camera	-	-	-	-	✓
Laser Guide	-	-	✓	-	-
RS232, USB and SD card interface	✓	✓	✓	✓	✓
Bluetooth	✓	✓	✓	✓	✓
Internal Flash Memory (2 GB)	✓	✓	✓	✓	✓
Hotshoe interface for Radio-Handle	✓	✓	✓	✓	✓
Guide Light (EGL)	✓	✓	-	✓	✓
WLAN	✓	✓	✓	✓	✓

✓Standard - Not available

2.2 System Concept

2.2.1 Software Concept

Description

All instruments use the same software concept.

Software for TS models

Software type	Description
TS firmware (xx.fw)	The Leica Captivate software is running on the TS instrument and covers all functions of the instrument. The main applications and languages are integrated into the firmware and cannot be deleted. The languages released with Leica Captivate are included in the firmware file.
Applications (xx.axx)	Many optional survey-specific applications are available for the TS instruments. All applications are included in the Leica Captivate firmware file and can be loaded separately. Some of the applications are activated freely and require no licence key; others require purchasing and are only activated with a licence key. If the licence is not loaded to the instrument, applications requiring a licence key run for a trial period. For a trial run, the Measure&Stakeout licence must be available on the TS.
Customised applications (xx.axx)	Customised software, specific to user requirements, can be developed using the GeoC++ development kit. Information on the GeoC++ development environment is available on request from a Leica Geosystems representative.

Software upload

☞ Uploading software can take some time. Ensure that the battery is at least 80% full before you start the upload. Do not remove the battery during the upload process.

Software update instructions for all TS models:

1. Download the most recent firmware file from https://myworld.leica-geosystems.com. Refer to Introduction.
2. Copy the firmware file into the **System** folder on the memory device.
3. Start the instrument. Select **Settings\Tools\Update software**. Select the firmware file and start the update.
4. When the update is complete, a message appears.

2.2.2 Power Concept

General

Use the batteries, chargers and accessories recommended by Leica Geosystems to ensure the correct functionality of the instrument.

Power options

Model	Power supply
all TS models	Internally by GEB222 battery, OR

Model	Power supply
	Externally by GEV52 cable and GEB371 battery. If an external power supply is connected and the internal battery is inserted, then the external power is used.
SmartAn-tenna	Internally via GEB212 battery fitted into the antenna.

2.2.3 Data Storage Concept

Description

Data is stored on a memory device. The memory device can be an SD card or internal memory. For data transfer an USB stick can also be used.

Memory device

Device	Description
SD card	All instruments have an SD card slot fitted as standard. An SD card can be inserted and removed. Available capacity: 1 GB and 8 GB.
USB stick	All instruments have a USB port fitted as standard.
Internal memory	All instruments have an internal memory fitted as standard. Available capacity: 2 GB.

☞ While other SD cards/USB sticks can be used, Leica Geosystems recommends to only use Leica SD cards/USB sticks and is not responsible for data loss or any other error that can occur while using a non-Leica SD card/USB stick.

☞ Unplugging connecting cables or removing the SD card or USB stick during the measurement can cause loss of data. Only remove the SD card or USB stick or unplug connecting cables when the TS instrument is switched off.

Transfer data

Data can be transferred in various ways.

☞ SD cards can directly be used in an OMNI drive as supplied by Leica Geosystems. Other PC card drives can require an adaptor.

Container for instrument and accessories - part 1 of 2

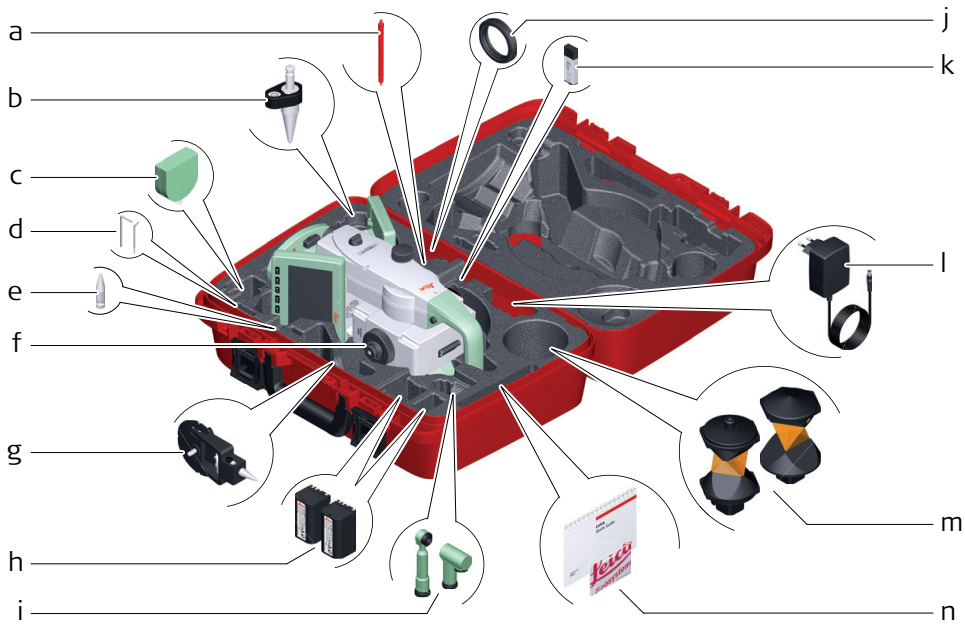

008614_001

a	Stylus
b	GLS14 mini pole
c	GHM007 Instrument height meter
d	Allen key and adjustment tool
e	Tip for GMP101 mini prism
f	Instrument with tribrach and standard handle or RadioHandle
g	GMP101 mini prism
h	GEB222 batteries
i	GFZ3 or GOK6 diagonal eyepiece
j	Counterweight for diagonal eyepiece
k	MS1, 1 GB USB memory stick
l	GEV192 AC power supply for battery charger
m	GRZ4 or GRZ122 prism
n	Manuals and USB documentation card

Container for instrument and accessories - part 2 of 2

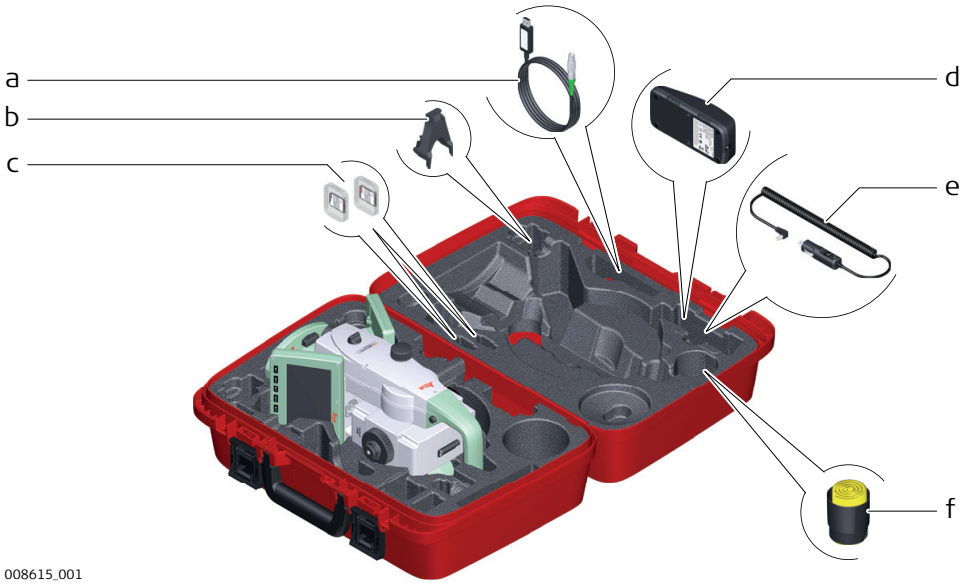

a Cables
b GHT196 tribrach bracket for height meter
c SD cards and covers
d GKL311 battery charger
e Car adapter power plug for battery charger (stored under battery charger)
f Protective cover for instrument, sunshade for objective lens and cleaning cloth

Container for GS14/GS16/GS15 SmartPole/ SmartStation and accessories - part 1 of 2

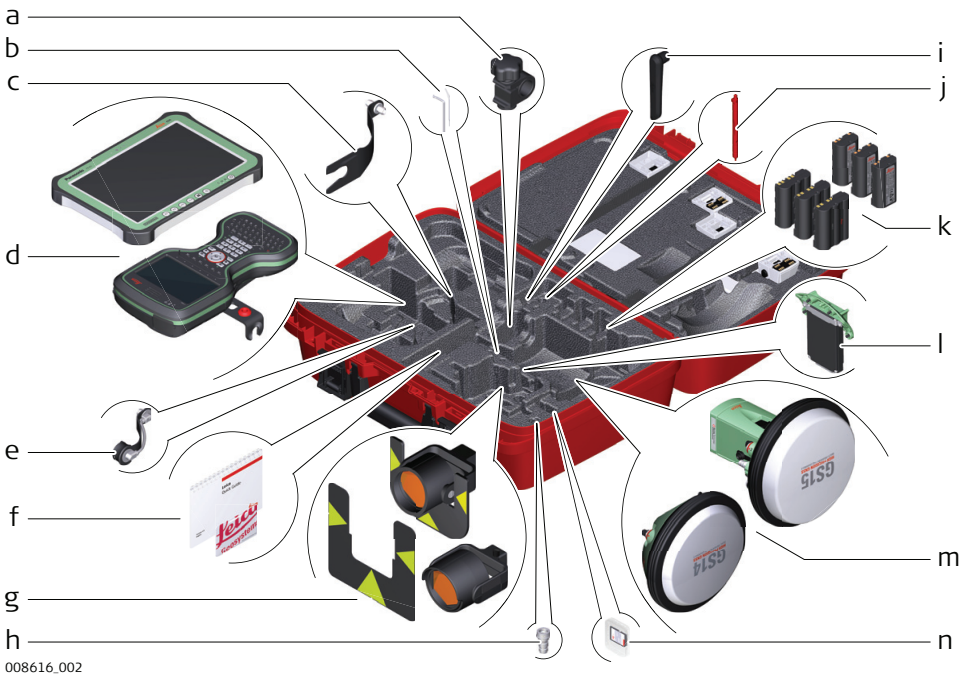

a GHT63 pole holder clamp
b Allen key and adjustment tool
c GAD33 antenna arm
d CS35 tablet or CS20 field controller with GHT62 holder
e GAD108 antenna arm
f Manuals and USB documentation card
g GPR121 circular prism PRO or GZT4 target plate for GPH1 and GPH1 prism holder with GPR1 circular prism
h GAD109 QN-TNC Adapter
i GAT25 radio antenna
j Stylus
k GEB212 or GEB331 batteries
l SLXX RTK modem
m GS14/GS16 or GS15 antenna
n SD card and cover

Container for GS14/GS16/GS15 SmartPole/ SmartStation and accessories - part 2 of 2

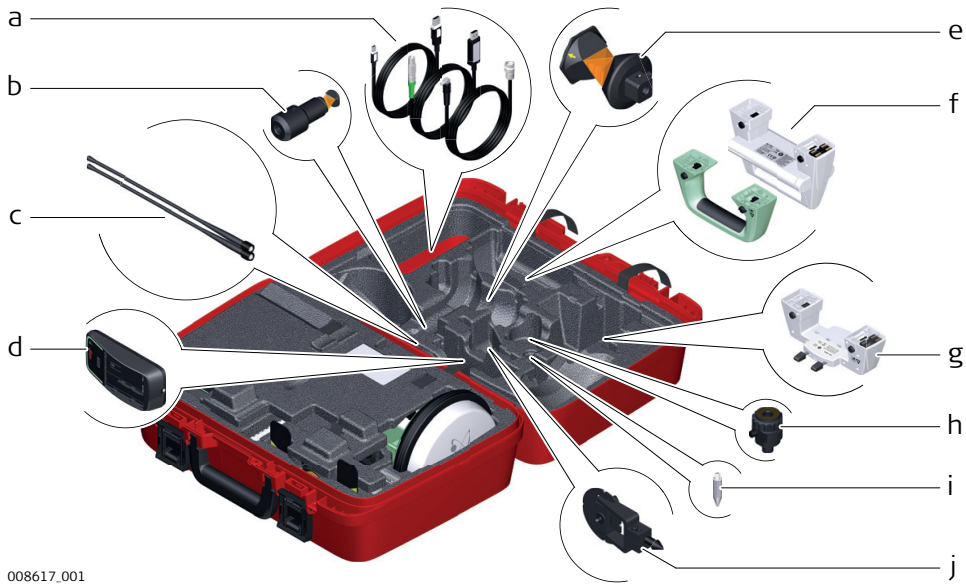

a Cables
b GRZ101 mini prism and GAD103 adapter
c GAT1 or GAT2 radio antennas
d GKL311 charger
e GRZ4 or GRZ122 prism
f Standard handle or RadioHandle
g GAD110 adapter for GS14/GS16 and GS15 antenna
h GAD31 screw to stub adapter
i Mini prism spike
j GMP101 mini prism

Container for TS robotic pole setup, Small-Size

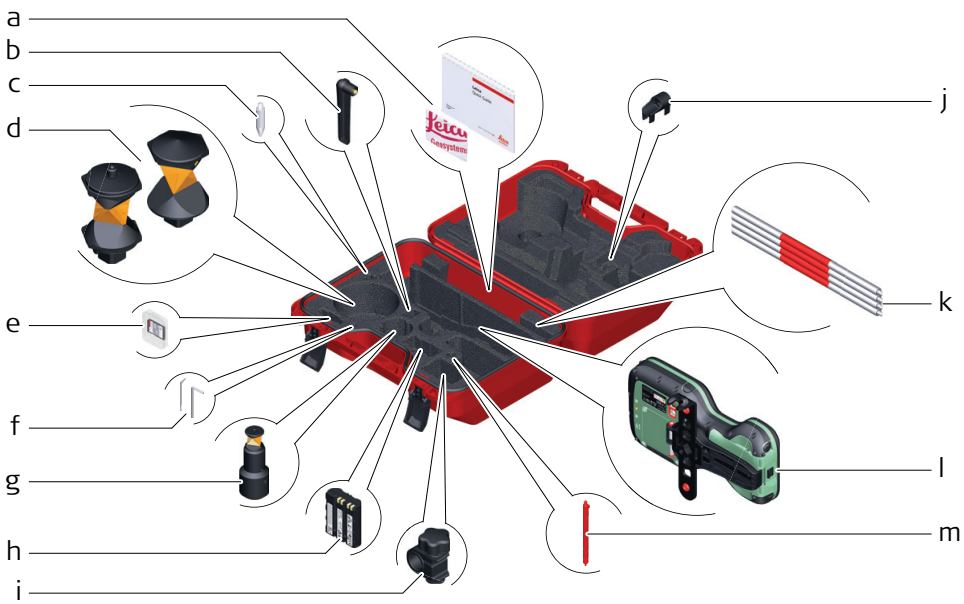

008620_001

a	Manuals and USB documentation card
b	GAT25 radio antenna
c	Mini prism spike
d	GRZ4 or GRZ122 prism
e	SD card and cover
f	Adjustment tool and allen key
g	GRZ101 mini prism and GAD103 adapter
h	GEB331 battery
i	GHT63 pole holder clamp
j	Tip for mini pole
k	GLI115 clip-on bubble for GLS115 mini prism pole
l	CS20 field controller and GHT66 holder
m	Stylus

Instrument components part 1 of 2

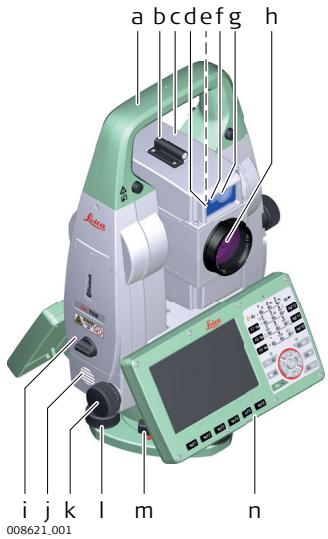

a Carry handle
b Optical sight
c Telescope, integrating EDM, ATRplus, EGL, PS, overview camera
d EGL flashing diode - yellow and red
e Overview camera
f PowerSearch, transmitter
g PowerSearch, receiver
h Coaxial optics for angle and distance measurement, and exit port of visible laser beam for distance measurements
i SD Card and USB stick
j Loudspeaker
k Horizontal drive
l Tribrach footscrew
m Tribrach securing screw
n Second keyboard (optional)

Instrument components part 2 of 2

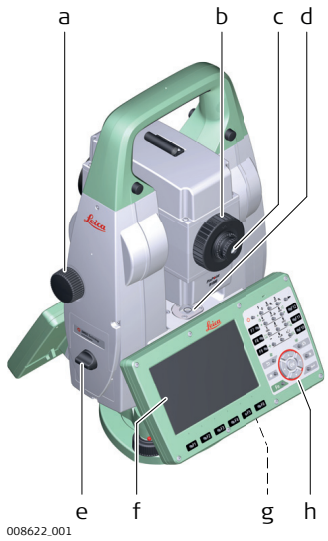

a Vertical drive
b Focusing ring
c Interchangeable eyepiece
d Circular level
e Battery compartment
f Touch screen
g Stylus for touch screen
h Keyboard

Communication Side Cover

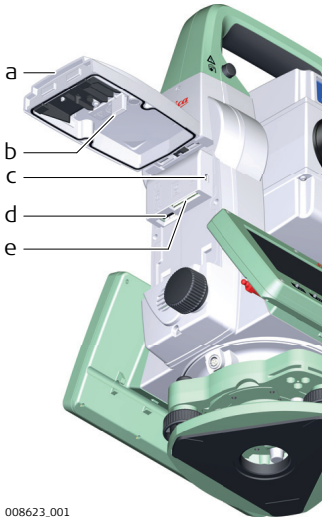

a Compartment lid
b USB stick cap storage
c USB device port (mini AB OTG)
d USB host port for USB stick
e SD card port

Instrument components for SmartStation

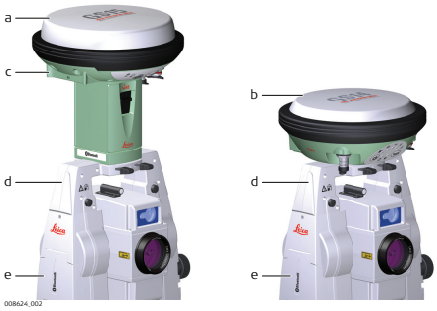

a GS15 SmartAntenna
b GS14/GS16 SmartAntenna
c RTK slot-in device
d GAD110 SmartAntenna Adapter
e Communication side cover

Instrument components for remote mode

a RadioHandle
b Communication side cover

Laser guide components

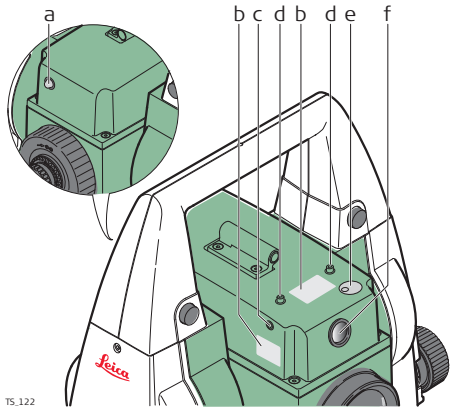

a Operation indicator LED, orange
b Labelling
c Horizontal adjustment screws
d Fixing screws
e Safety cover for vertical adjustment screws
f Laser aperture

3 User Interface

3.1 Keyboard

Keyboard

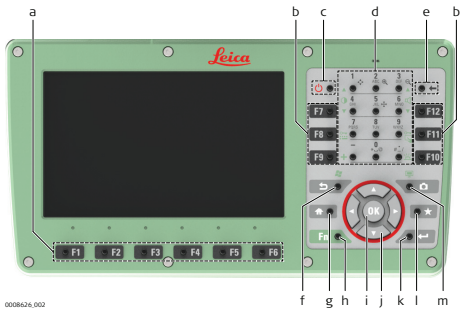

a Function keys F1-F6
b Function keys F7-F12
c ON/OFF
d Alphanumeric keys
e Backspace
f Esc
g Home
h Fn
i OK
j Arrow keys
k Enter
l Favourites
m Camera

Keys

Key		Function
Function keys **F1 to F6**	F1	Correspond to six softkeys that appear on the bottom of the screen when the screen is activated.
Function keys **F7 to F12**	F7	User definable keys to execute chosen commands or access chosen screens.
Alphanumeric keys	4 GHI	To type letters and numbers.
Camera		To capture an image with the camera.
Esc		Leaves the current screen without storing any changes.
Fn	Fn	Switches between first and second level of any key on the keyboard.
Enter		Selects the highlighted line and leads to the next logical menu / dialog. Starts the edit mode for editable fields. Opens a selectable list.
ON/OFF		If the instrument is already off: Turns on the instrument when held for 2 s. If the instrument is already on: Turns to Power Options menu when held for 2 s.
Favourites		Goes to a favourites menu.
Home		Switches to the Home Menu.
Arrow keys		Move the focus on the screen.

Key		Function
OK	OK	Selects the highlighted line and leads to the next logical menu / dialog. Starts the edit mode for editable fields. Opens a selectable list.
Backspace	←	Deletes the job in the centre of the job carousel.

Key combinations

Key			Function
Fn	+		Hold **Fn** while pressing . Switch to Windows.
Fn	+		Hold **Fn** while pressing . Take a screenshot of the current screen.
Fn	+	1	Hold **Fn** while pressing **1**. Increase the screen brightness.
Fn	+	4 GHI	Hold **Fn** while pressing ***4***. Decrease the screen brightness.
Fn	+	3 DEF	Hold **Fn** while pressing **3**. Increase the volume for acoustic warning signals, beeps and keypresses on the instrument.
Fn	+	6 MNO	Hold **Fn** while pressing **6**. Decrease the volume for acoustic warning signals, beeps and keypresses on the instrument.
Fn	+	7 PQRS	Hold **Fn** while pressing **7**. Lock/unlock the keyboard.
Fn	+	9 WXYZ	Hold **Fn** while pressing **9**. Lock/unlock the touch screen.
Fn	+	–	Hold **Fn** while pressing . Enter a plus sign instead of a minus sign.
Fn	+	#	Hold **Fn** while pressing . Turn the keyboard illumination on/off.

3.2 Operating Principles

Keyboard and touch screen

The user interface is operated either by the keyboard or by the touch screen with supplied stylus. The workflow is the same for keyboard and touch screen entry, the only difference lies in the way information is selected and entered.

Operation by keyboard

Information is selected and entered using the keys.

Operation by touch screen

Information is selected and entered on the screen using the supplied stylus.

Operation	Description
To select an item	Tap on the item.

Operation	Description
To start the edit mode in editable fields	Tap on the editable field.
To highlight an item or parts of it for editing	Drag the supplied stylus from the left to the right.
To accept data entered into an editable field and exit the edit mode	Tap on the screen outside of the editable field.
To open a context-sensitive menu	Tap on the item and hold for 2 s.

4.1 Setting Up the TS Instrument

Instrument setup step-by-step

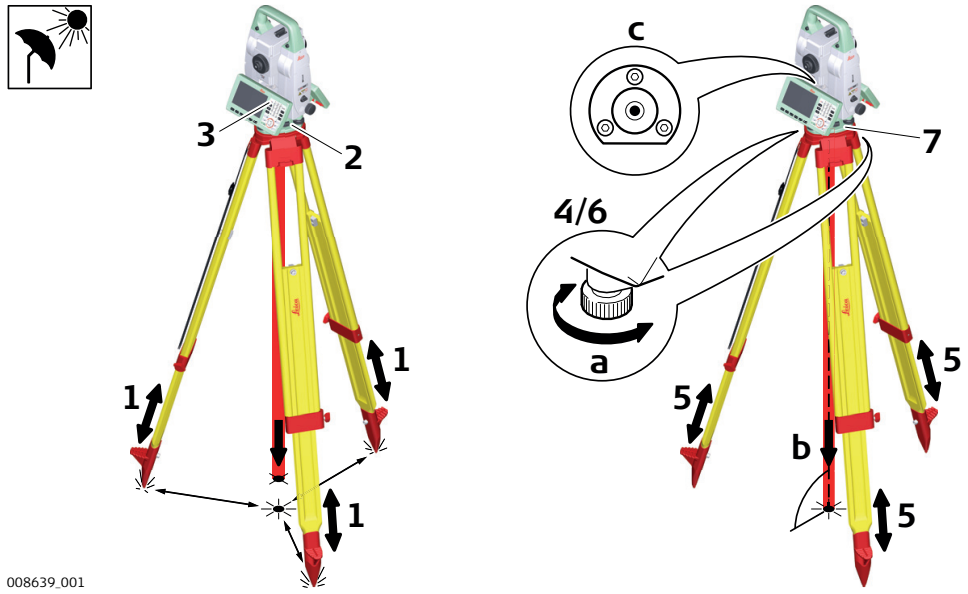

☞	Shield the instrument from direct sunlight and avoid uneven temperatures around the instrument.
1.	Extend the tripod legs to allow for a comfortable working posture. Position the tripod above the marked ground point, centring it as good as possible. Ensure that the tripod plate is roughly horizontal.
2.	Fasten the tribrach and instrument onto the tripod.
3.	Turn on the instrument by pressing ⏻ ◎. Select **Settings**/**TS instrument**/**Level & compensator** to activate the laser plummet and electronic level.
4.	Use the tribrach footscrews (a) to centre the plummet (b) above the ground point.
5.	Adjust the tripod legs to level the circular level (c).
6.	By using the electronic level, turn the tribrach footscrews (a) to level the instrument precisely.
7.	Centre the instrument precisely over the ground point (b) by shifting the tribrach on the tripod plate.
8.	Repeat steps 6. and 7. until the required accuracy is achieved.

☞ Use the AutoHeight laser plummet for vertically setting up the instrument over a ground point and for measuring the instrument height when setting up the station.

SmartStation setup step-by-step

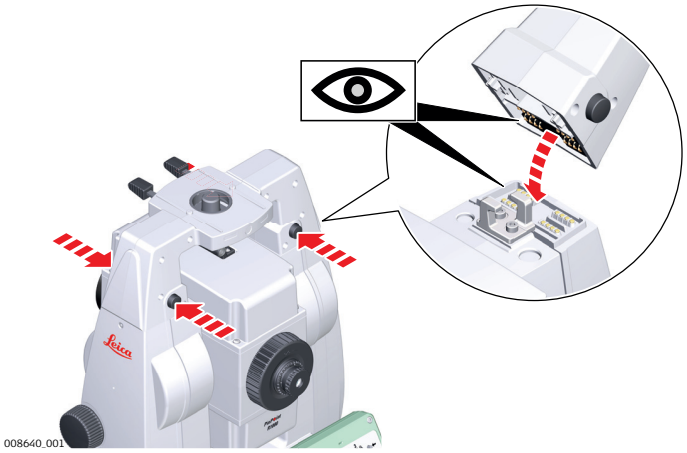

1.	Place the GAD110 adapter for the GS15/GS14/GS16 antenna onto the instrument by simultaneously pressing and holding-in the four push buttons.
☞	Ensure that the interface connection on the underside of the adapter is on the same side as the Communication side cover.
2.	Place the GS15/GS14/GS16 antenna onto the adapter by simultaneously pressing and holding-in the two press clips.

4.3 Setting Up SmartPole

SmartPole setup using GS15/GS14/ GS16

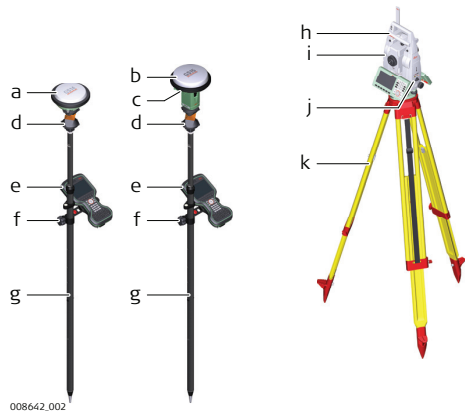

a GS14/GS16 antenna
b GS15 antenna
c RTK slot-in device
d 360° prism
e Field controller on GHT66 holder (Alternative, not illustrated: tablet on GHT78 holder)
f GHT63 clamp
g GLS31 pole with snap-lock positions
h RH16/RH17 RadioHandle
i Instrument
j Communication side cover, integrated
k Tripod

4.4 Setting up for Remote Control (with the RadioHandle)

Setup for remote control with RadioHandle

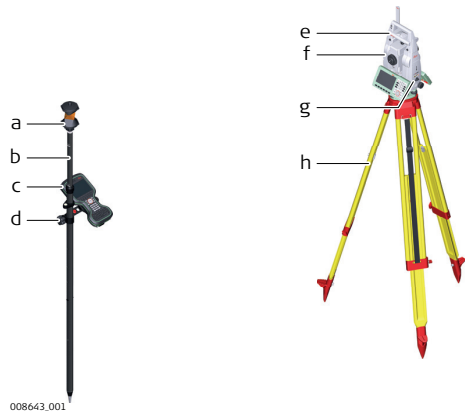

a 360° prism
b Prism pole
c Field controller on GHT66 holder (Alternative, not illustrated: tablet on GHT78 holder)
d GHT63 clamp
e RH16/RH17 RadioHandle
f Instrument
g Communication side cover
h Tripod

4.5 Setting up for Remote Control (with the TCPS29/30)

Setup for remote control with TCPS29/30

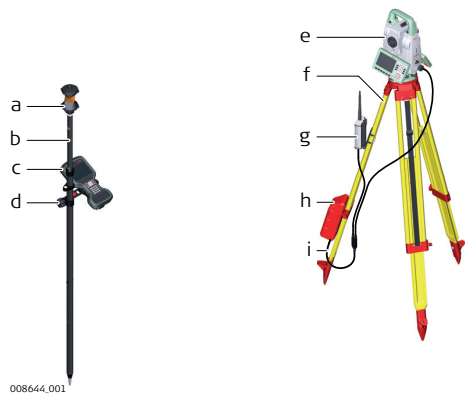

a 360° prism
b Prism pole
c Field controller on GHT66 holder (Alternative, not illustrated: tablet on GHT78 holder)
d GHT63 clamp
e Instrument
f Tripod
g TCPS29/30
h External battery GEB371
i Y-cable

Mounting base radio to tripod step-by-step

1. The GHT43 tripod adapter is used to mount the TCPS29/30 to all Leica standard tripods, and to optimise the radio transmission performance. Attach the TCPS29/30 to the adapter and then attach the adapter to the tripod leg.

2. Adjust the angle of TCPS29/30 until it is vertical.

3. Adjust the location of the adapter on the tripod leg so that there are no metallic objects in the horizontal plane around the antenna.

   ☞ Metallic objects near the antenna disturb radio transmissions.

4. ☞ To achieve the best performance from the TCPS29/30, mount it in a vertical position on the tripod leg, approximately 30cm from the top.

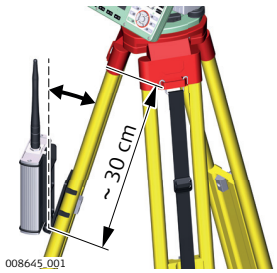

☞ If the adapter is no longer able to retain its angle position, the adjustment bolt at the hinge can be tightened slightly.

4.6 Fixing the Field Controller to a Holder and Pole

Components of the GHT66 holder

The GHT66 holder consists of the following components:

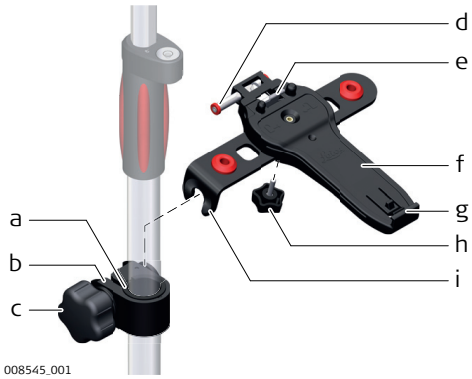

GHT63 clamp

- a Plastic sleeve
- b Pole clamp
- c Clamp bolt

GHT66 holder

- d Locking pin
- e Top clip
- f Mounting plate
- g Bottom clip
- h Tightening screw
- i Mounting arm

Fixing the field controller and GHT66 to a pole step-by-step

☞ For an aluminium pole, fit the plastic sleeve to the pole clamp.

1. Insert the pole into the clamp hole.
2. Attach the holder to the clamp using the clamp bolt.
3. Adjust the angle and the height of the holder on the pole to a comfortable position.
4. Tighten the clamp with the clamp bolt.

5. Before placing the CS field controller onto the mounting plate, ensure that the locking pin is put into the unlocked position. To unlock the locking pin, push the locking pin to the left.

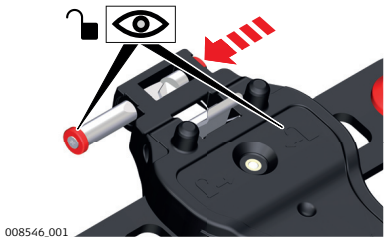

6. Hold the CS field controller above the holder and lower the end of the CS field controller into the mounting plate.

7. Apply slight pressure in a downward direction and then lower the top part of the CS field controller until the unit is clicked into the holder. The guides of the mounting plate aid in this action.

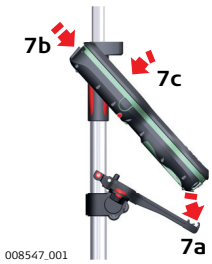

8. After the CS field controller is placed onto the mounting plate, ensure that the locking pin is put into the locked position. To lock the locking pin, push the locking pin to the right.

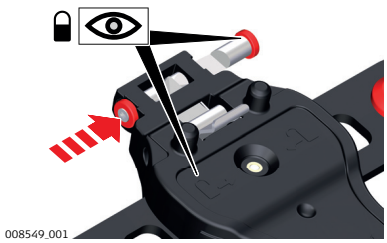

Detaching the field controller from a pole step-by-step

1. Unlock the locking pin by pushing the locking pin to the left of the mounting plate.

2. Place your palm over the top of the field controller.

3. While in this position, lift the top of the field controller from the holder.

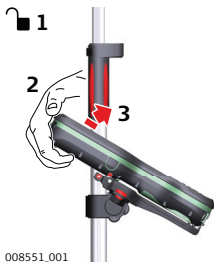

4.7 Fixing the CS35 Tablet to a Holder and Pole

Components of GHT63 clamp and GHT78 holder

For fixing the CS35 tablet to a pole you need the following components:

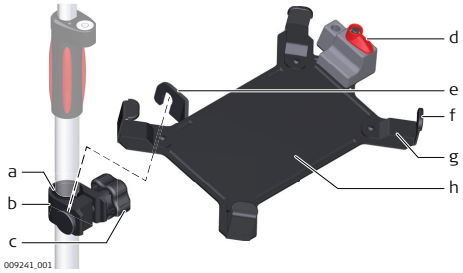

GHT63 clamp

- a Plastic sleeve
- b Pole clamp
- c Clamp bolt

GHT78 holder

- d Locking lever
- e Mounting arm
- f Mounting brackets
- g Removable inserts
- h Mounting plate

Fixing the CS35 tablet and GHT78 to a pole step-by-step

☞	For an aluminium pole, fit the plastic sleeve to the pole clamp.
☞	If the 833343 hand strap with high corner guards is attached to the tablet, remove the inserts from the mounting brackets before fixing the tablet to the mounting plate. To untighten the screws of the removable inserts, use a 2.5 mm allen key.
1.	Insert the pole into the clamp hole.
2.	Attach the holder to the clamp using the clamp bolt.
3.	Adjust the angle and the height of the holder on the pole to a comfortable position.
4.	Tighten the clamp with the clamp bolt.
5.	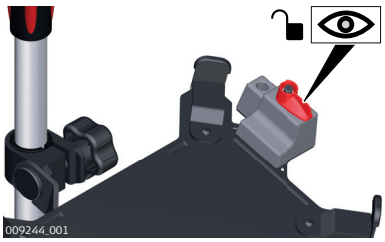 Before placing the CS35 tablet onto the mounting plate, ensure that the locking lever is set to the unlocked position (see illustration).
6.	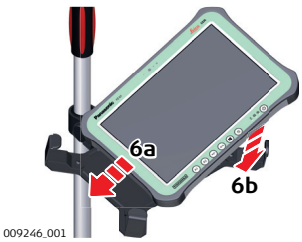 Lower the left side of the tablet and slide it from right to left into the mounting brackets of the holder.

7.

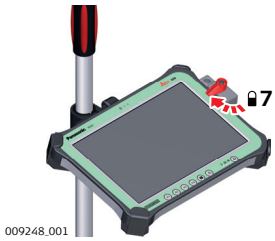

After placing the tablet onto the mounting plate, set the locking lever to the locked position (see illustration).

Detaching the tablet from the holder/pole step-by-step

1.

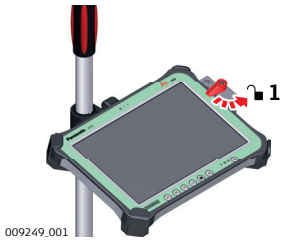

Set the locking lever of the GHT78 holder to the unlocked position.

2.

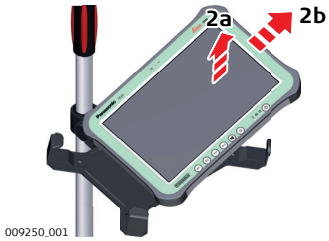

Lift the right side of the tablet and slide the tablet to the right and out of the holder.

4.8 Connecting to a Personal Computer

Description

Windows Mobile Device Center for PC with Windows 7/Windows 8/Windows 10 operating system is the synchronization software for Windows mobile-based pocket PC. WMDC enables a PC and a Windows mobile-based pocket PC to communicate.

Leica USB drivers support Windows 7, Windows 8 (8.1) and Windows 10 operating systems.

Cables

Leica USB drivers support:

Name	Description
GEV223	USB data cable, 1.8 m, connects instrument to Mini-USB to USB
GEV234	USB data cable, 1.65 m, connects CS to GS or CS to PC (USB)
GEV261	Y-cable, 1.8 m, connects instrument to PC – battery

Uninstalling the previous drivers

☞ Skip the following steps if you have never installed Leica USB drivers before.

If older drivers were previously installed on the PC, follow the instructions to uninstall the drivers prior the installation of the new drivers.

1. Connect your instrument to the PC via cable.
2. On your PC, select to **Control Panel** > **Device Manager**.
3. In **Network Adapters**, right-click on **Remote NDIS based LGS...**.
4. Click on **Uninstall**.

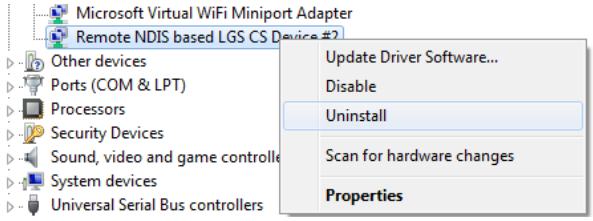

5. Set **Delete the driver...** as checked. Press **OK**.

Install Leica USB drivers

1. Start the PC.
2. Run the **Setup_Leica_USB_XXbit.exe** to install the drivers necessary for Leica devices. Depending on the version (32bit or 64bit) of the operating system on your PC, you have to select between the three setup files following:
   - Setup_Leica_USB_32bit.exe
   - Setup_Leica_USB_64bit.exe
   - Setup_Leica_USB_64bit_itanium.exe

   ☞ To check the version of your operating system, go to **Control Panel** > **System** > **System type**.

   ☞ The setup requires administrative privileges.

   ☞ The setup has to be run only once for all Leica devices.
3. The **Welcome to InstallShield Wizard for Leica GS, TS/TM/MS, CS and GR USB drivers** window appears.

   ☞ Ensure that all Leica devices are disconnected from your PC before you continue!

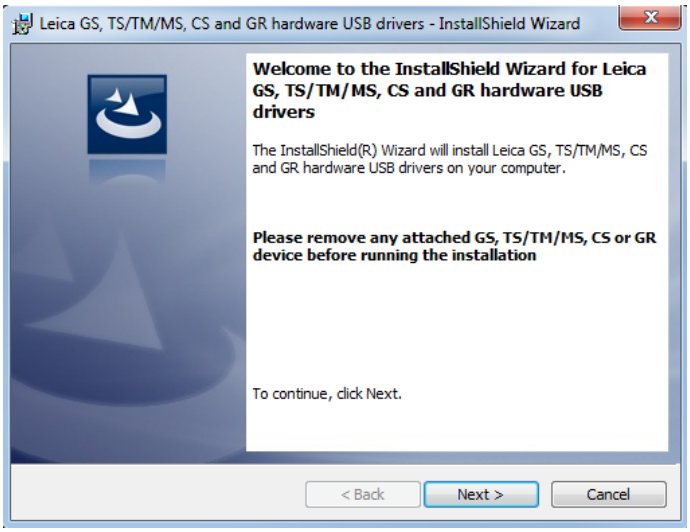

4.	Click **Next>**.
5.	The **Ready to Install the Program** window appears.

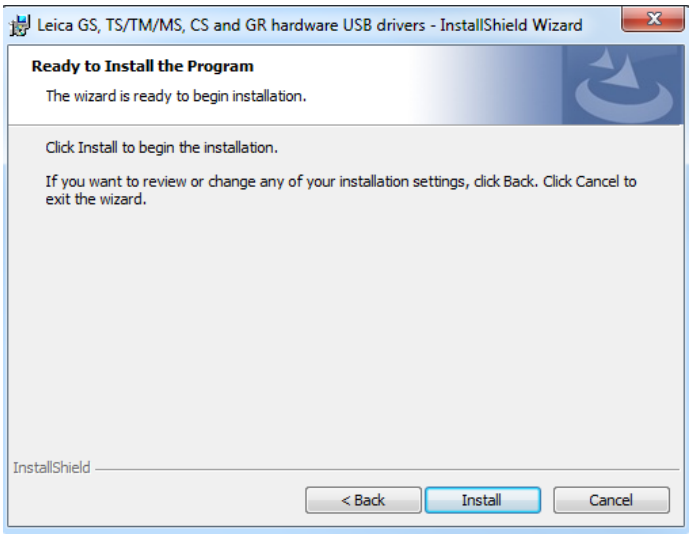

6.	Click **Install**. The drivers will be installed on your PC.
7.	The **InstallShield Wizard Completed** window appears.
8.	Click **Finish** to exit the wizard.

Connect to PC via USB cable step-by-step

1.	Start the PC.
2.	Plug the cable into the instrument.
3.	Turn on the instrument.
4.	Plug the cable into the USB port of the PC.
5.	Press the Windows Start button at the bottom left corner of the screen.
6.	Type the IP address of the device into the search field. • \\192.168.254.1\ for field controller
7.	Press **Enter**.

A file browser opens. You can now browse within the folders on the instrument.

4.9 Power Functions

Turning the instrument on

Press and hold power key (⏻ ◎) for 2s.

☞ The instrument must have a power supply.

Turning the instrument off

Press and hold power key (⏻ ◎) for 2 s.

☞ The instrument must be on.

☞ For instruments setup in permanent installations with external power sources, for example monitoring, ensure external power remains available until the instrument has successfully completed the power down process.

Power options menu

Press and hold power key (⏻ ◎) for 2 s to open **Power Options** menu.

☞ Instrument must be on.

Option	Description
Turn off	Turn TS instrument off.
Stand-by	Put TS instrument into stand-by mode. ☞ In stand-by mode, the TS instrument shuts down and reduces power consumption. Rebooting from stand-by mode is quicker than a cold start after turning off.
Reset...	Performs one of the following options: • **Restart** (restarts Windows EC7) • **Reset Windows EC7** (resets Windows EC7 and communication settings to factory defaults) • **Reset installed software** (resets settings of all installed software) • **Reset Windows EC7 and installed software** (resets Windows EC7 and settings of all installed software)

4.10 Batteries

4.10.1 Operating Principles

First-time use/ charging batteries

- The battery must be charged before using it for the first time because it is delivered with an energy content as low as possible.
- The permissible temperature range for charging is from 0 °C to +40 °C/+32 °F to +104 °F. For optimal charging, we recommend charging the batteries at a low ambient temperature of +10 °C to +20 °C/+50 °F to +68 °F if possible.
- It is normal for the battery to become warm during charging. Using the chargers recommended by Leica Geosystems, it is not possible to charge the battery once the temperature is too high.
- For new batteries or batteries that have been stored for a long time (> three months), it is effectual to make only one charge/discharge cycle.
- For Li-Ion batteries, a single discharging and charging cycle is sufficient. We recommend carrying out the process when the battery capacity indicated on the charger or on a Leica Geosystems product deviates significantly from the actual battery capacity available.

Operation/discharging

- The batteries can be operated from −20 °C to +55 °C/−4 °F to +131 °F.
- Low operating temperatures reduce the capacity that can be drawn; high operating temperatures reduce the service life of the battery.

4.10.2 Battery for the TS Instrument

Change battery step-by-step

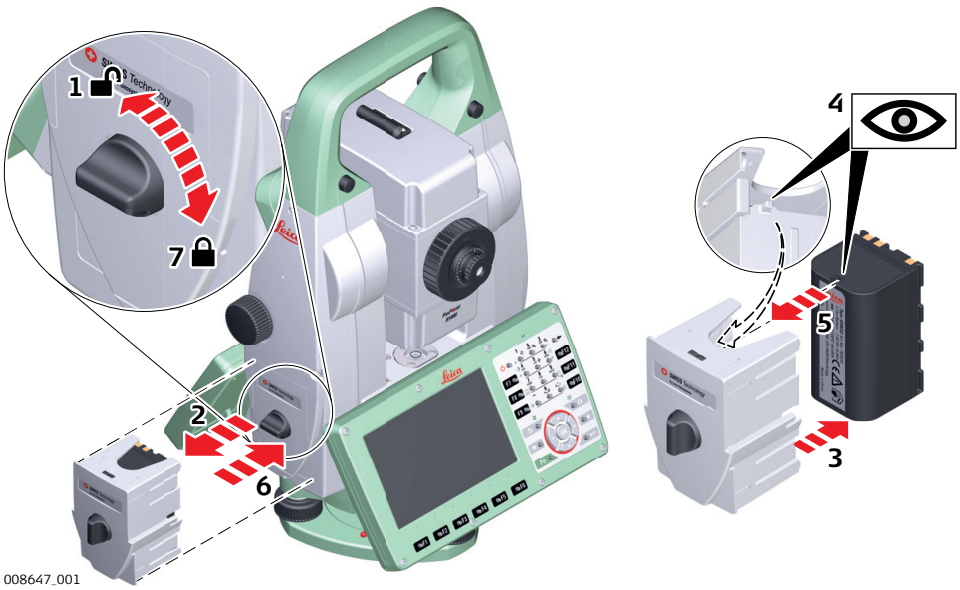

1.	Face the instrument so that the vertical drive screw is on the left. The battery compartment is below the vertical drive. Turn the knob to the vertical position, opening the lid of the battery compartment.
2.	Pull out the battery housing.
3.	Pull the battery out of the battery housing.
4.	At the top of the battery is a notch which corresponds to the inner surface of the battery housing. This notch helps you to place the battery correctly.

5. Place the battery into the battery housing, ensuring that the contacts are facing outward. Click the battery into position.

6. Place the battery housing into the battery compartment. Push the battery housing in until it fits completely into the battery compartment.

7. Turn the knob to lock the battery compartment. Ensure that the knob is returned to its original horizontal position.

4.11 Working with the Memory Device

☞
- Keep the card dry.
- Use it only within the specified temperature range.
- Do not bend the card.
- Protect the card from direct impacts.

☞ Failure to follow these instructions could result in data loss and/or permanent damage to the card.

Insert and remove an SD card step-by-step

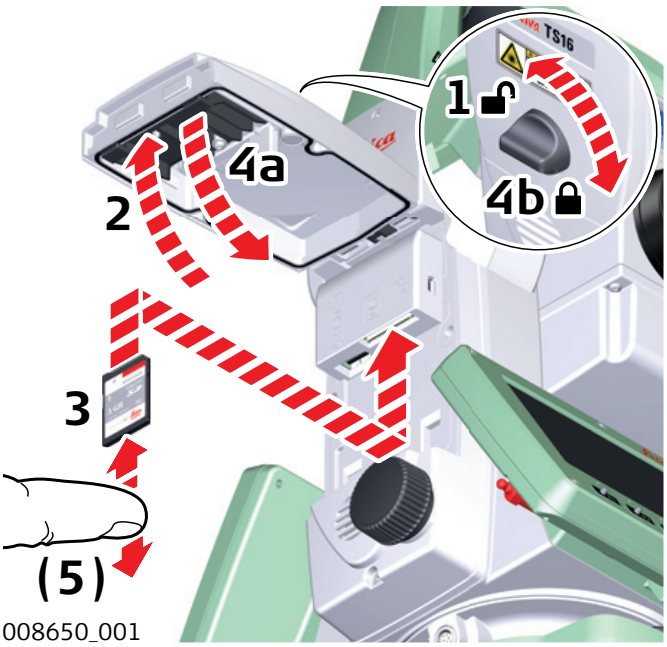

008650_001

☞ The SD card is inserted into a slot inside the Communication side cover of the instrument.

1. Turn the knob on the Communication side cover to the vertical position to unlock the communication compartment.

2. Open the lid of the communication compartment to access the communication ports.

3. To insert the SD card, slide it firmly into the SD slot until it clicks into position.

   ☞ The card must be held with the contacts at the top and facing toward the instrument.

   ☞ Do not force the card into the slot.

4. To remove the SD card, gently press on the top of the card to release it from the slot.

5. Close the lid and turn the knob to the horizontal position to lock the communication compartment.

Insert and remove a USB stick step-by-step

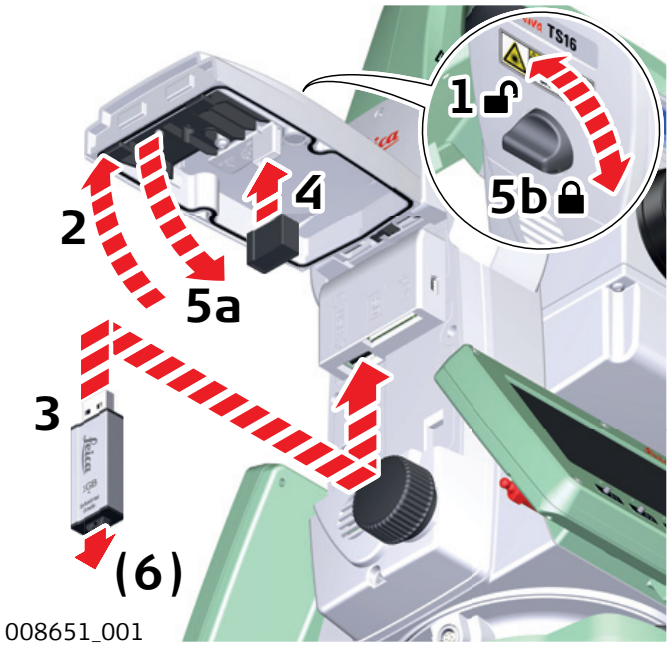

008651_001

☞ The USB stick is inserted into the USB host port inside the Communication side cover of the instrument.

1. Turn the knob on the Communication side cover to the vertical position to unlock the communication compartment.

2. Open the lid of the communication compartment to access the communication ports.

3. Slide the USB stick with the Leica logo facing you firmly into the USB host port until it clicks into position.

   ☞ Do not force the USB stick into the port.

4. If desired, store the lid of the USB stick on the underside of the compartment lid.

5. Close the lid and turn the knob to the horizontal position to lock the compartment.

6. To remove the USB stick, open the lid of the compartment and slide the USB stick out of the port.

4.12 LED Indicators

LED indicators on RadioHandle

Description

The RadioHandle has **L**ight **E**mitting **D**iode indicators. They indicate the basic RadioHandle status.

Diagram of the LED Indicators

a Power LED
b Link LED
c Data Transfer LED
d Mode LED

Description of the LED Indicators

IF the	is	THEN
Power LED	off	power is off.
	green	power is on.
Link LED	off	no radio link to field controller.
	red	radio link to field controller.
Data Transfer LED	off	no data transfer to/from field controller.
	green or green flashing	data transfer to/from field controller.
Mode LED	off	data mode.
	red	configuration mode.

4.13 Guidelines for Correct Results

Distance measurement

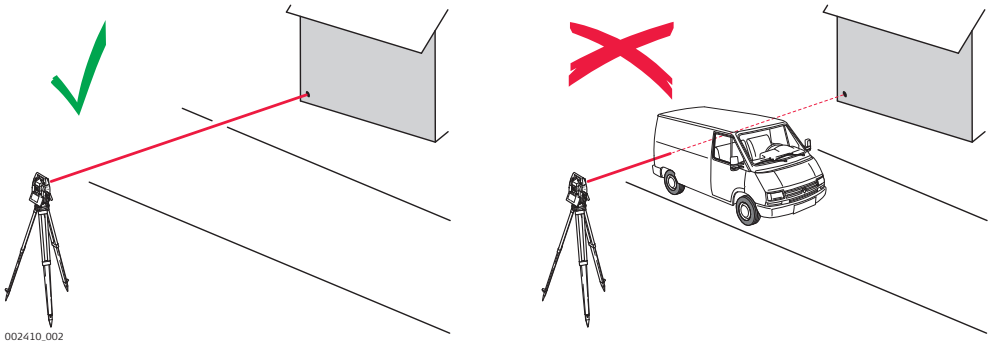

When measurements are being made using the red laser EDM, the results can be influenced by objects passing between the EDM and the intended target surface. This occurs because reflectorless measurements are made to the first surface returning sufficient energy to allow the measurement to take place. For example, if the intended target surface is the surface of a building, but a vehicle passes between the EDM and the target surface as the measurement

is triggered, the measurement may be made to the side of the vehicle. The result is the distance to the vehicle, not to the surface of the building.

If using the long range measurement mode (> 1000 m, > 3300 ft) to prisms, and an object passes within 30 m of the EDM as the measurement is triggered, the distance measurement may be similarly effected due to the strength of the laser signal.

☞ Very short distances can also be measured reflectorless in **Prism** mode to well reflecting natural targets. The distances are corrected with the additive constant defined for the active reflector.

⚠WARNING

Due to laser safety regulations and measuring accuracy, using the Long Range Reflectorless EDM is only allowed to prisms that are more than 1000m (3300ft) away.

☞ Accurate measurements to prisms should be made in **Prism** mode.

☞ When a distance measurement is triggered, the EDM measures to the object which is in the beam path at that moment. If a temporary obstruction, for example a passing vehicle, heavy rain, fog or snow is between the instrument and the point to be measured, the EDM may measure to the obstruction.

☞ Do not measure with two instruments to the same target simultaneously to avoid getting mixed return signals.

ATRplus/Lock

Instruments equipped with an ATRplus sensor permit automatic angle and distance measurements to prisms. The prism is sighted with the optical sight. After initiating a distance measurement, the instrument sights the prism centre automatically. Vertical and horizontal angles and the distance are measured to the centre of the prism. The lock mode enables the instrument to follow a moving prism.

☞ As with all other instrument errors, the collimation error of the automatic aiming must be redetermined periodically. Refer to 5 Check & Adjust about checking and adjusting instruments.

☞ When a measurement is triggered while the prism is still moving, distance and angle measurements may not be made for the same position and coordinates may vary.

☞ If the prism location is changed too quickly, the target may be lost. Make sure that the speed does not exceed the figure given in the technical data.

5 Check & Adjust

5.1 Overview

Description

Leica Geosystems instruments are manufactured, assembled and adjusted to the best possible quality. Quick temperature changes, shock or stress can cause deviations and decrease the instrument accuracy. It is therefore recommended to check and adjust the instrument from time to time. This check and adjust can be done in the field by running through specific measurement procedures. The procedures are guided and must be followed carefully and precisely as described in the following chapters. Some other instrument errors and mechanical parts can be adjusted mechanically.

Electronic adjustment

The following instrument errors can be checked and adjusted electronically:

Instrument error	Description
l, t	Compensator longitudinal and transversal index errors
i	Vertical index error, related to the standing axis
c	Horizontal collimation error, also called line of sight error
a	Tilting axis error
ATRplus	ATRplus zero point error for Hz and V

If the compensator and the horizontal corrections are activated in the instrument configuration, every angle measured in the daily work is corrected automatically. Check whether the tilt correction and the horizontal correction are turned on.

The results are displayed as errors but used with the opposite sign as corrections when applied to measurements.

Mechanical adjustment

The following instrument parts can be adjusted mechanically:

- Circular level on instrument and tribrach
- Optical plummet - option on tribrach
- Allen screws on tripod

Precise measurements

To get precise measurements in the daily work, it is important:

- To check and adjust the instrument from time to time.
- To take high precision measurements during the check and adjust procedures.
- To measure targets in two faces. Some of the instrument errors are eliminated by averaging the angles from both faces.

☞ During the manufacturing process, the instrument errors are carefully determined and set to zero. As mentioned above, these errors can change and it is highly recommended to redetermine them in the following situations:

- Before the first use
- Before every high precision survey
- After rough or long transportation
- After long working periods
- After long storage periods
- If the temperature difference between current environment and the temperature at the last calibration is more than 20 °C

Summary of errors to be adjusted electronically

Instrument error	Effects Hz	Effects V	Elimination with two face measurement	Automatically corrected with proper adjustment
c - Line of sight error	✓	–	✓	✓
a - Tilting axis error	✓	–	✓	✓
l - Compensator index error	–	✓	✓	✓
t - Compensator index error	✓	–	✓	✓
i - Vertical index error	–	✓	✓	✓
ATRplus Collimation error	✓	✓	–	✓

5.2 Preparation

☞ 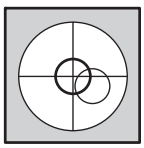

Before determining the instrument errors, the instrument has to be levelled using the electronic level.
The tribrach, the tripod and the underground should be stable and secure from vibrations or other disturbances.

☞

The instrument should be protected from direct sunlight to avoid thermal warming.
It is also recommended to avoid strong heat shimmer and air turbulence. The best conditions are early in the morning or with overcast sky.

☞ Before starting to work, the instrument has to become acclimatised to the ambient temperature. Take at least 15 minutes into account or approximately 2 minutes per °C of temperature difference from storage to working environment.

☞ Even after adjustment of the ATRplus, the crosshairs may not be positioned exactly on the centre of the prism after an ATRplus measurement has been completed. This outcome is a normal effect. To speed up the ATRplus measurement, the telescope is normally not positioned exactly on the centre of the

prism. These small deviations ATRplus offsets, are calculated individually for each measurement and corrected electronically. This means that the horizontal and vertical angles are corrected twice: first by the determined ATRplus errors for Hz and V, and then by the individual small deviations of the current aiming.

Next step

IF the task is to	THEN
adjust a combination of instrument errors	Refer to 5.3 Combined Adjustment (l, t, i, c and ATRplus).
adjust the tilting axis	Refer to 5.4 Tilting Axis Adjustment (a).
adjust the circular level	Refer to 5.5 Adjusting the Circular Level of the Instrument and Tribrach.
adjust the laser/optical plummet	Refer to 5.7 Inspecting the Laser Plummet of the Instrument.
adjust the tripod	Refer to 5.9 Servicing the Tripod.

5.3 Combined Adjustment (l, t, i, c and ATRplus)

Description

The combined adjustment procedure determines the following instrument errors in one process:

Instrument error	Description
l, t	Compensator longitudinal and transversal index errors
i	Vertical index error, related to the standing axis
c	Horizontal collimation error, also called line of sight error
ATRplus Hz	ATRplus zero point error for horizontal angle option
ATRplus V	ATRplus zero point error for vertical angle option

Combined adjustment procedure step-by-step

The following table explains the most common settings.

1.	**Leica Captivate - Home**: **Settings\TS instrument\Check & adjust**
2.	**Check & Adjust** Select the option: **Check & adjust the compensator, index error, line of sight error & automatic target aiming**
3.	**Next**
4.	**Face I measurement**

If **Calibrate the automatic target aiming** is checked and an ATRplus is available, the adjustment will include the determination of the ATRplus Hz and V adjustment errors.

☞ Use a clean Leica standard prism as the target. Do not use a 360° prism.

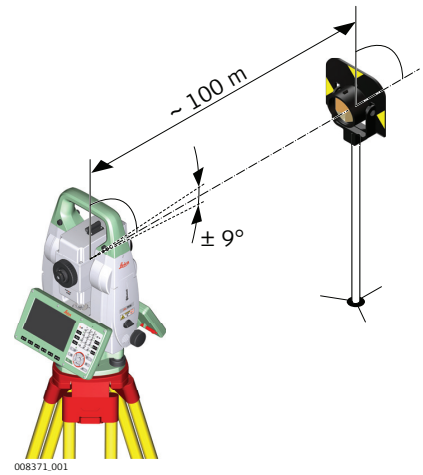

5. **Measure** to measure and to continue to the next screen.

   Non-motorised instruments guide to the other face.

   ☞ The fine pointing has to be performed manually in both faces.

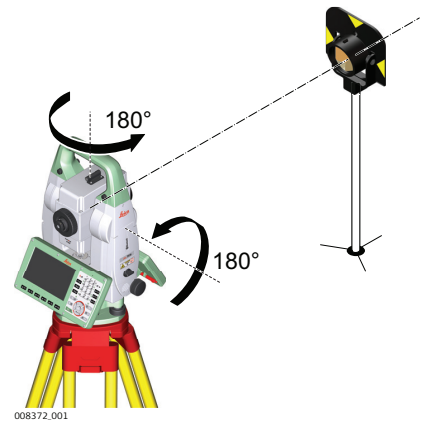

6. **Face II measurement**
   Measure to measure the same target in the other face and to calculate the instrument errors.

☞ If one or more errors are bigger than the predefined limits, the procedure must be repeated. All measurements of the current run are rejected and none of them is averaged with the results from previous runs.

7. Adjustment Status

   Number of measurements: Shows the number of runs completed. One run consists of a measurement in face I and face II.

   l Component quality (1 σ): and similar lines show the standard deviations of the determined adjustment errors. The standard deviations can be calculated from the second run onwards.

☞ Measure at least two runs.

8. **Next** to continue with the check & adjust procedure.

9. Select **Add another calibration loop** if more runs have to be added. **Next** and continue with step 4.

   OR

   Select **Finish the calibration & store the results** to finish the calibration process. **Next** to view the adjustment results.

10. Select **Finish** to accept the results. No more runs can be added later.

OR

Select **Redo** to decline all measurements and to repeat all calibration runs.

OR

Back returns to the previous screen.

Next step

IF the results are	THEN
to be stored	If the Use status is set to Yes, **Next** overwrites the old adjustment errors with the new ones.
to be determined again	**Redo** rejects all new determined adjustment errors and repeats the whole procedure. Refer to paragraph Combined adjustment procedure step-by-step.

5.4 Tilting Axis Adjustment (a)

Description

This adjustment procedure determines the following instrument error:

Instrument error	Description
a	Tilting-axis error

Determination of tilting axis error step-by-step

The following table explains the most common settings.

☞ Determine the horizontal collimation error (c) before starting this procedure.

1.	**Leica Captivate - Home**: **Settings\TS instrument\Check & adjust**
2.	**Check & Adjust** Select the option: **Check & adjust the tilting axis**
3.	**Face I measurement** Aim the telescope accurately at a target at about 100 m distance (or at least 20 m). The target must be positioned at least 27°/30 gon above or beneath the horizontal plane. 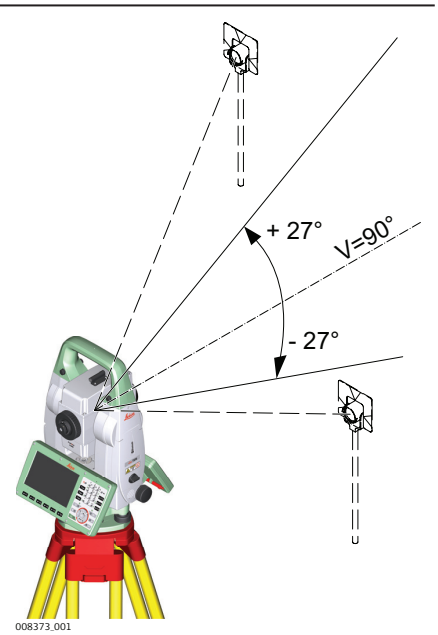

4. **Measure** to measure and to continue to the next screen. Motorised instruments change automatically to the other face.

   Non-motorised instruments guide to the other face.

   ☞ The fine pointing must be performed manually in both faces.

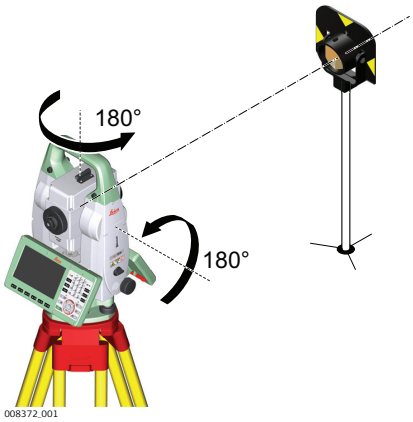

5. **Face II measurement**

   Measure to measure the same target in the other face and to calculate the tilting axis error.

☞ If the error is bigger than the predefined limit, the procedure must be repeated. The tilting axis measurements of the current run are then rejected and not averaged with the results from previous runs.

6. Adjustment Status

   Number of measurements: Shows the number of runs completed. One run consists of a measurement in face I and face II.

   a T-axis quality (1 σ): shows the standard deviation of the determined tilting axis error. The standard deviation can be calculated from the second run onwards.

☞ Measure at least two runs.

7. **Next** to continue with the check & adjust procedure.
8. Select **Add another calibration loop** if more runs have to be added. **Next** and continue with step 3.

   OR

   Select **Finish the calibration & store the results** to finish the calibration process. No more runs can be added later. **Next** to view the adjustment results.

9. Select **Finish** to accept the results. No more runs can be added later.

   OR

   Select **Redo** to decline all measurements and to repeat all calibration runs.

Next step

IF the results are	THEN
to be stored	**Next** overwrites the old tilting axis error with the new one.
to be determined again	**Redo** rejects the new determined tilting axis error and repeats the whole procedure. Refer to paragraph Combined adjustment procedure step-by-step.

Adjusting the circular level step-by-step

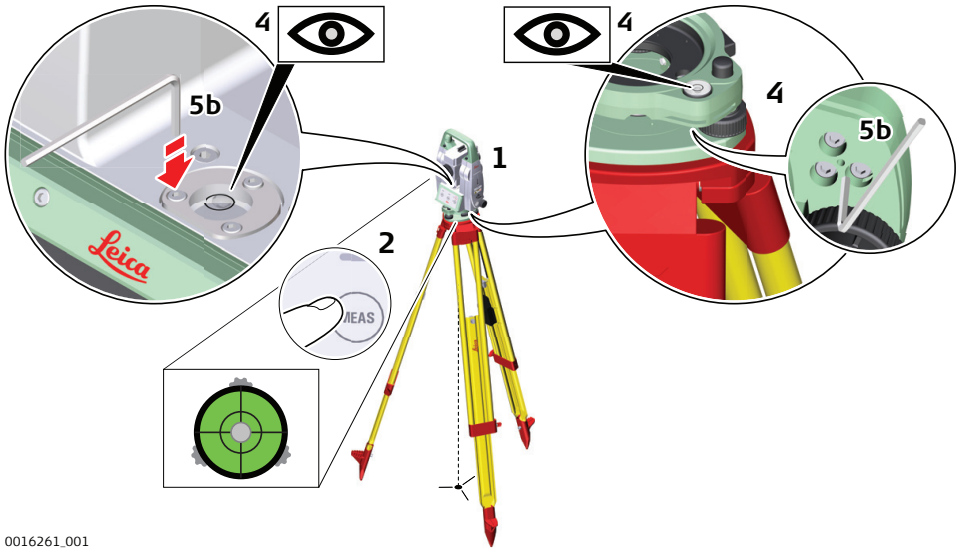

1.	Place and secure the instrument into the tribrach and onto a tripod.
2.	Using the tribrach footscrews, level the instrument with the electronic level.
3.	Select **Settings\TS instrument\Level & compensator** to access the **Level & Compensator** panel.
4.	Check the position of the circular level on the instrument and tribrach.
5.	a If both circular levels are centred, no adjustments are necessary b If one or both circular levels are not centred, adjust as follows: **Instrument**: If it extends beyond the circle, use the supplied allen key to centre it with the adjustment screws. Turn the instrument by 200 gon (180°). Repeat the adjustment procedure if the circular level does not stay centred. **Tribrach**: If it extends beyond the circle, use the supplied allen key to centre it with the adjustment screws.
☞	After the adjustments, all adjusting screws must have the same tightening tension and no adjusting screw should be loose.

5.6 Adjusting the Circular Level of the Prism Pole

Adjusting the circular level step-by-step

1. Suspend a plumb line.
2. Use a pole bipod, to align the prism pole parallel to the plumb line.
3. Check the position of the circular level on the prism pole.
4.
   a If the circular level is centred, no adjustment is necessary.
   b If the circular level is not centred, use an allen key to centre it with the adjustment screws.

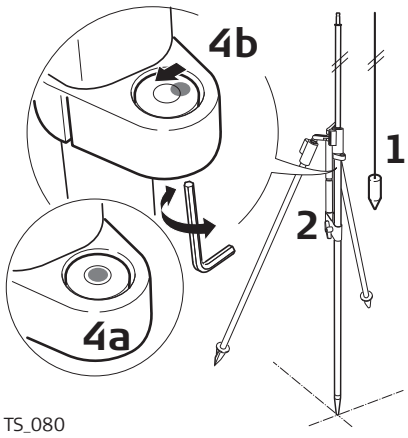

☞ After the adjustments, all adjusting screws must have the same tightening tension and no adjusting screw should be loose.

5.7 Inspecting the Laser Plummet of the Instrument

☞ The laser plummet is located in the vertical axis of the instrument. Under normal conditions of use, the laser plummet does not need adjusting. If an adjustment is necessary due to external influences, return the instrument to any Leica Geosystems authorised service workshop.

Inspecting the laser plummet step-by-step

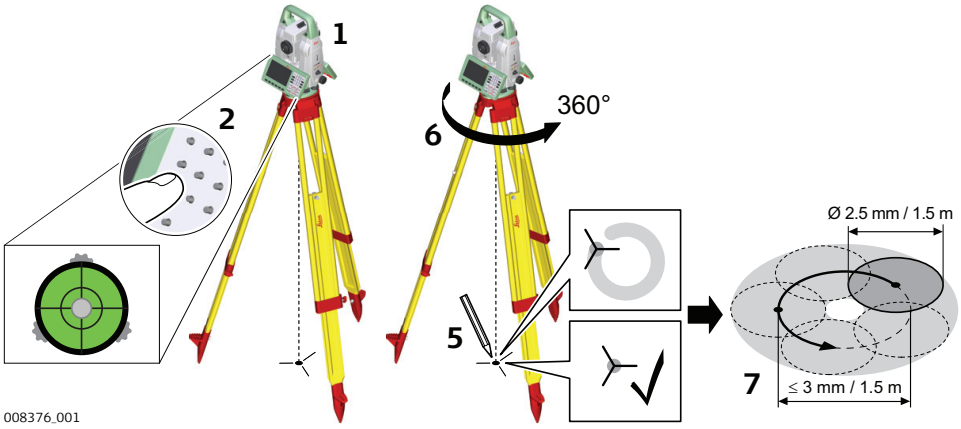

The following table explains the most common settings.

1. Set up the instrument on the tripod approximately 1.5 m above the ground and level up.
2. Select **Settings\TS instrument\Level & compensator** to access the **Level & Compensator** panel.
   The laser plummet is switched on when the **Level & Compensator** panel is entered. Adjust the laser plummet intensity.

   ☞ Inspection of the laser plummet should be carried out on a bright, smooth and horizontal surface, such as a sheet of paper.
3. Mark the centre of the red laser dot on the ground.

4. Turn the instrument slowly through 360°, carefully observing the movement of the red laser dot.

☞ The maximum diameter of the circular movement described by the centre of the laser dot should not exceed 3mm at a height of 1.5m.

5. If the centre of the laser dot describes a perceptible circular movement, or moves more than 3 mm away from the point which was first marked, an adjustment may be required. Inform your nearest Leica Geosystems authorised service centre. Depending on brightness and surface, the diameter of the laser dot can vary. At 1.5 m, it is about 2.5 mm.

5.8 Adjusting the Laser Guide

☞ To avoid moisture or dust entering the Laser Guide compartment, adjustment screws and screw covers must be fixed after each adjustment procedure.

Adjustment

The recommended adjustment procedure is designed for distances of 50 m and 120 m. Use the adjustment drawing, which is showing a TS16 G telescope, with crosshairs for line of sight and Laser Guide. Look trough the telescope and aim to the crosshairs of the telescope. For well-adjusted Laser Guides, the laser beam should exactly match the circles for 50/120 m.

☞ Make sure, adjustment screws are accessible during adjustment.

☞ Make sure, the position of the telescope remains still. Check the target by looking trough the telescope.

☞ Adjustment procedure might be repeated to achieve high precision adjustment.

Adjustment

Please enlarge this target plate to 200% prior to using it for adjustment.

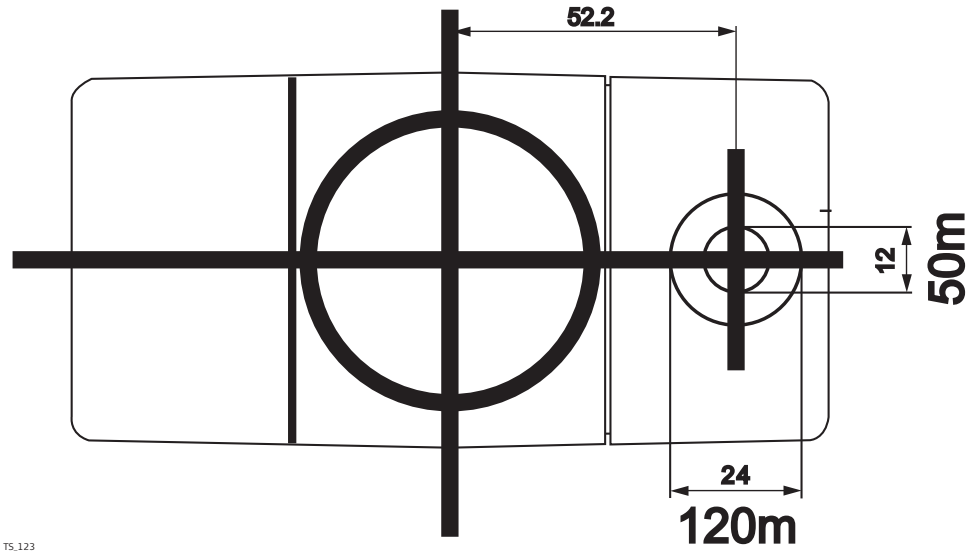

Laser guide screws

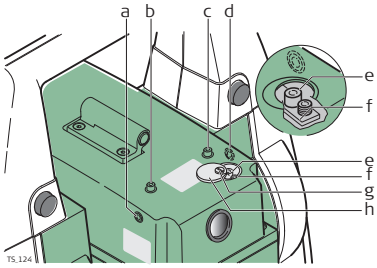

a Horizontal adjustment screw
b Fixing screw
c Fixing screw
d Horizontal adjustment screw
e Vertical adjustment screw
f Vertical adjustment screw
g Safety cover screw
h Safety cover

Laser Guide adjustment step-by-step

This step-by-step description describes the Laser Guide adjustment for a distance of 50 m. Place the target plate at a distance of 120 m to perform the laser guide adjustment for 120 m.

Step	Description
☞	Make sure that the instrument is levelled.
1.	Place the laser guide target plate at a distance of 50 m and aim with the telescope of the instrument at the crosshairs of the target plate.
2.	Loosen the safety cover screw (g) and move the safety cover (h) to the side to access the vertical adjustment screws.
3.	Loosen the vertical adjustment screws (e) and (f). Do not fully remove the screws.
4.	Loosen the fixing screws (b) and (c) as little as the spring force remains.
5.	**Horizontal adjustment:** To adjust the laser guide to the left, loosen the horizontal adjustment screw (d). Tighten the horizontal adjustment screw (a) as much as to move the laser beam slightly left of the upper crosshairs on the target plate.
6.	To adjust the laser guide to the right, loosen the horizontal adjustment screw (a). Tighten the horizontal adjustment screw (d) as much as to move the laser beam slightly right of the upper crosshairs on the target plate.
7.	Fix the horizontal adjustment by tightening the opposite horizontal adjustment screw either (a) or (d). ☞ Fixing the opposite screw moves the laser beam exactly to the vertical crosshair.
8.	Finish the horizontal adjustment by tightening the fixing screws (b) and (c).
9.	**Vertical adjustment:** Loosen the vertical adjustment screw (e) as much as to move the laser beam slightly upon of the upper crosshairs on the target plate.
10.	Fix the vertical adjustment by tightening the vertical adjustment screw (f). ☞ Fixing this screw moves the laser beam exactly to the crosshairs centre.
11.	Finish the vertical adjustment by moving the safety cover (h) to its original position and by tightening the safety cover screw (g).

Step	Description
☞	The laser beam of an adjusted laser guide matches exactly the circle of 50 m or 120 m depending on the distance.

5.9 Servicing the Tripod

Servicing the tripod step-by-step

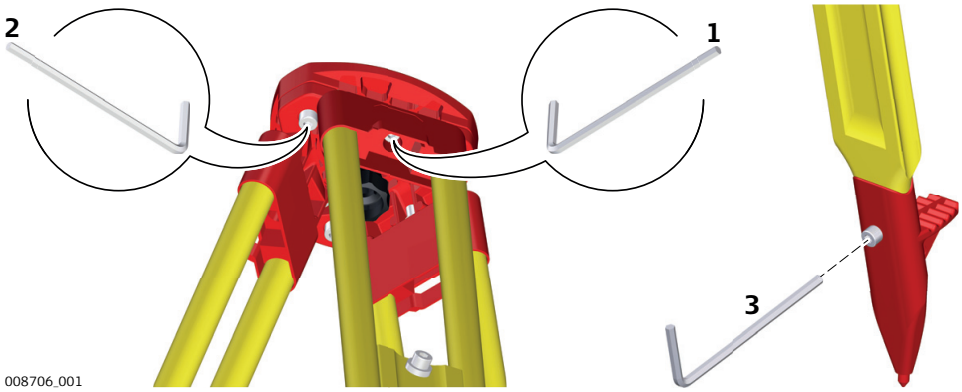

The following table explains the most common settings.

☞	The connections between metal and timber components must always be firm and tight.
1.	Tighten the leg cap screws moderately, with the supplied Allen key.
2.	Tighten the articulated joints on the tripod head enough to keep the tripod legs open when lifting the tripod off the ground.
3.	Tighten the Allen screws of the tripod legs.

6 Care and Transport

6.1 Transport

Transport in the field

When transporting the equipment in the field, always make sure that you

- either carry the product in its original container,
- or carry the tripod with its legs splayed across your shoulder, keeping the attached product upright.

Transport in a road vehicle

Never carry the product loose in a road vehicle, as it can be affected by shock and vibration. Always carry the product in its container and secure it.

For products for which no container is available use the original packaging or its equivalent.

Shipping

When transporting the product by rail, air or sea, always use the complete original Leica Geosystems packaging, container and cardboard box, or its equivalent, to protect against shock and vibration.

Shipping, transport of batteries

When transporting or shipping batteries, the person responsible for the product must ensure that the applicable national and international rules and regulations are observed. Before transportation or shipping, contact your local passenger or freight transport company.

Field adjustment

Exposing the product to high mechanical forces, for example through frequent transport or rough handling, or storing the product for a long time may cause deviations and a decrease in the measurement accuracy. Periodically carry out test measurements and perform the field adjustments indicated in the User Manual before using the product.

6.2 Storage

Product

Respect the temperature limits when storing the equipment, particularly in summer if the equipment is inside a vehicle. Refer to 7 Technical Data for information about temperature limits.

Li-Ion batteries

- Refer to 7 Technical Data for information about storage temperature range
- Remove batteries from the product and the charger before storing
- After storage recharge batteries before using
- Protect batteries from damp and wetness. Wet or damp batteries must be dried before storing or use
- A storage temperature range of 0 °C to +30 °C / +32 °F to +86 °F in a dry environment is recommended to minimize self-discharging of the battery
- At the recommended storage temperature range, batteries containing a 40% to 50% charge can be stored for up to one year. After this storage period the batteries must be recharged

6.3 Cleaning and Drying

Product and accessories

- Blow dust off lenses and prisms.
- Never touch the glass with your fingers.
- Use only a clean, soft, lint-free cloth for cleaning. If necessary, moisten the cloth with water or pure alcohol. Do not use other liquids; these may attack the polymer components.

Fogging of prisms

Prisms that are cooler than the ambient temperature tend to fog. It is not enough simply to wipe them. Keep them for some time inside your jacket or in the vehicle to allow them to adjust to the ambient temperature.

Damp products

Dry the product, the transport container, the foam inserts and the accessories at a temperature not greater than 40 °C /104 °F and clean them. Remove the battery cover and dry the battery compartment. Do not repack until everything is completely dry. Always close the transport container when using in the field.

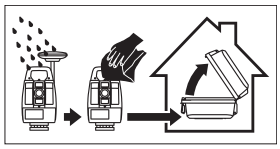

Cables and plugs

Keep plugs clean and dry. Blow away any dirt lodged in the plugs of the connecting cables.

6.4 Maintenance

☞

An inspection of the motorisation in motorised instruments must be done in a Leica Geosystems authorised service centre. Leica Geosystems recommends an inspection of the product every 12 months.

For instruments which are in intensive or permanent use, for example tunnelling or monitoring, the recommended inspection cycle may be reduced.

7 Technical Data

7.1 Angle Measurement

Accuracy

Available angular accuracies	Standard deviation Hz, V ISO 17123-3	Display resolution			
["]	[mgon]	["]	[°]	[mgon]	[mil]
1	0.3	0.1	0.0001	0.1	0.01
2	0.6	0.1	0.0001	0.1	0.01
3	1.0	0.1	0.0001	0.1	0.01
5	1.5	0.1	0.0001	0.1	0.01

Characteristics

Absolute, continuous, diametric.

7.2 Distance Measurement with Reflectors

Range

Reflector	Range A		Range B		Range C	
	[m]	[ft]	[m]	[ft]	[m]	[ft]
Standard prism (GPR1)	1800	6000	3000	10000	3500	12000
Three standard prisms (GPR1)	2300	7500	4500	14700	5400	17700
360° prism (GRZ4, GRZ122)	800	2600	1500	5000	2000	7000
360° Mini prism (GRZ101)	450	1500	800	2600	1000	3300
Mini prism (GMP101)	800	2600	1200	4000	2000	7000
Reflector tape GZM31) 60 mm x 60 mm	150	500	250	800	250	800
Shortest measuring distance:			0.9 m			

Atmospheric conditions

Range	Description
A	Strong haze, visibility 5 km; or strong sunlight, severe heat shimmer
B	Light haze, visibility about 20 km; or moderate sunlight, slight heat shimmer
C	Overcast, no haze, visibility about 40 km; no heat shimmer

☞ Measurements can be made to reflector tapes over the entire range without external ancillary optics.

Accuracy

Accuracy refers to measurements to standard prisms.

Distance measuring mode	Standard deviation ISO 17123-4, standard prism	Standard deviation ISO 17123-4, tape	Measurement time, typical [s]
Once	1 mm + 1.5 ppm	3 mm + 2 ppm	2.4
Once & fast	2 mm + 1.5 ppm	3 mm + 2 ppm	2.0
Continuously	3 mm + 1.5 ppm	3 mm + 2 ppm	< 0.15
Repeatedly & average	1 mm + 1.5 ppm	1 mm + 1.5 ppm	-

Beam interruptions, severe heat shimmer and moving objects within the beam path can result in deviations of the specified accuracy.

The display resolution is 0.1 mm.

Characteristics

Type	Description
Principle	Phase measurement
Type	Coaxial, visible red laser
Carrier wave	658 nm
Measuring system	System Analyzer Basis 100–150 MHz

7.3 Distance Measurement without Reflectors

Range

R500

Kodak Gray Card	Range D		Range E		Range F	
	[m]	[ft]	[m]	[ft]	[m]	[ft]
White side, 90 % reflective	250	820	400	1310	>500	>1640
Grey side, 18 % reflective	150	490	200	660	>200	>660

R1000

Kodak Gray Card	Range D		Range E		Range F	
	[m]	[ft]	[m]	[ft]	[m]	[ft]
White side, 90 % reflective	800	2630	1000	3280	>1000	>3280
Grey side, 18 % reflective	400	1320	500	1640	>500	>1640

Range of Measurement:	0.9 m - 1200 m TS16 G R30 instruments: 0.9 m - 30 m
Display unambiguous:	up to 1200 m

Atmospheric conditions

Range	Description
D	Object in strong sunlight, severe heat shimmer
E	Object in shade, or overcast

Range	Description
F	Underground, night and twilight

Accuracy

	ISO17123-4	Measure time, typical [s]	Measure time, maximum [s]
0-500	2 mm + 2 ppm	2*	15
>500m	4 mm + 2 ppm	6	15

* Up to 50 m

Object in shade, sky overcast. Beam interruptions, severe heat shimmer and moving objects within the beam path can result in deviations of the specified accuracy.

The display resolution is 0.1 mm.

Characteristics

Type	Description
Type	Coaxial, visible red laser
Carrier wave	658 nm
Measuring system	System Analyzer Basis 100–150 MHz

Laser dot size

Distance [m]	Laser dot size, approximately [mm]
at 30	7 × 10
at 50	8 × 20
at 100	16 × 25

7.4 Distance Measurement - Long Range (LO mode)

Range

The range of the long range measurements is the same for R500 and R1000.

Reflector	Range A		Range B		Range C	
	[m]	[ft]	[m]	[ft]	[m]	[ft]
Standard prism (GPR1)	2200	7300	7500	24600	>10000	>33000

Range of measurement: 1000 m to 12000 m

Display unambiguous: up to 12000 m

Atmospheric conditions

Range	Description
A	Strong haze, visibility 5 km; or strong sunlight, severe heat shimmer
B	Light haze, visibility about 20 km; or moderate sunlight, slight heat shimmer
C	Overcast, no haze, visibility about 40 km; no heat shimmer

Accuracy

Standard measuring	Standard deviation ISO 17123-4	Measure time, typical [s]	Measure time, maximum [s]
Long Range	5 mm + 2 ppm	2.5	12

Beam interruptions, severe heat shimmer and moving objects within the beam path can result in deviations of the specified accuracy. The display resolution is 0.1 mm.

Characteristics

Type	Description
Principle	Phase measurement
Type	Coaxial, visible red laser
Carrier wave	658 nm
Measuring system	System Analyzer Basis 100 MHz - 150 MHz

7.5 Automatic Target Aiming (ATRplus)

Range of target aiming/ target locking

Reflector	Range (Target Aiming)		Range (Target Locking)	
	[m]	[ft]	[m]	[ft]
Standard prism (GPR1)	1500	6000	1000	3300
360° prism GRZ4, GRZ122)	1000	3250	1000	3300
360° Mini prism (GRZ101)	450	1500	250	830
Mini prism (GMP101)	900	2880	600	2000
Reflector tape 60 mm x 60 mm	55	190	not qualified	
Machine Automation power prism (MPR122)	750	2500	650	2200

☞ For Machine Control purposes only!

☞ The maximum range depends on the atmospheric condition. Rain, strong sunlight or severe heat shimmer can decrease the maximum range.

Shortest measuring distance, 360° prism (Target aiming):	1.5 m
Shortest measuring distance, 360° prism (Target locking):	5 m

ATRplus accuracy with the GPR1 prism

Type	Accuracy
ATRplus angle accuracy Hz, V (std. dev. ISO 17123-3)	1 " (0.3 mgon)
Base Positioning accuracy (std.dev.)	± 1 mm

Maximum speed in lock mode

	Direction of prism movement	
	Tangential	**Radial**
Prism Lock only	14 m/s at 20 m	25 m/s
Prism Lock with **Measure distance**: **Continuously**	6 m/s at 20 m	6 m/s

☞ A tangential movement means the prism is passing by the instrument at the specified distance.
A radial movement means the prism is moving away from or towards the instrument in the line of sight direction.

Searching

Type	Value
Typical search time in field of view	1.5 s
Field of view	1°25′/1.55 gon
Definable search windows	Yes

Characteristics

Type	Description
Principle	Digital image processing
Type	Infrared laser

7.6 PowerSearch (PS)

Range

Reflector	Range	
	[m]	[ft]
Standard prism (GPR1)	300	1000
360° prism (GRZ4, GRZ122)	300*	1000*
360° mini prism (GRZ101)	Not recommended	
Mini prism (GMP101)	100	330

Measurements at the vertical limits of the fan or under unfavourable atmospheric conditions may reduce the maximum range. (*optimally aligned to the instrument)

Shortest measuring distance: 1.5 m

Searching

Type	Value
Typical search time	5 s
Default search area	Hz: 400 gon, V: 40 gon
Definable search windows	Yes

Characteristics

Type	Description
Principle	Digital signal processing

Type	Description
Type	Infrared laser

7.7 LOC8 Theft Deterrence and Location Device (optional)

Internal battery

Battery	Voltage	Capacity
Li-Ion	800 mAh Recharged by the total station battery when instrument is switched on	Up to 5 days Depending on mode of operation and cellular network conditions

Tracking period

Update rate up to 1 minute

Interfaces

Wi-Fi: 802.11 b/g/n

Environmental specifications

Temperature

Operating temperature [°C]	Storage temperature [°C]
−20 to +60	−20 to +60

7.8 Overview Camera

Overview camera

Type	Value
Sensor	5 Mpixel CMOS sensor
Focal length	21mm
Field of view	15.5° x 11.7° (19.4° diagonal)
Frame rate	≤20 frames per second
Focus	2 m (6.6 ft) to infinity at zoom level 1 x 7.5 m (24.6 ft) to infinity at zoom level 4 x
Image storage	JPEG up to 5 Mpixel (2560 x 1920)
Zoom	4-step (1x, 2x, 4x, 8x)
Whitebalance	Automatic and user configurable
Brightness	Automatic and user configurable

7.9 SmartStation

7.9.1 SmartStation Accuracy

☞ Measurement precision and accuracy in position and accuracy in height are dependent upon various factors including the number of satellites tracked, constellation geometry, observation time, ephemeris accuracy, ionospheric disturbance, multipath and resolved ambiguities. Figures quoted assume normal to favourable conditions.

Accuracy

Type	Position accuracy
Horizontal	5 mm + 0.5 ppm
Vertical	10 mm + 0.5 ppm

When used within reference station networks the position accuracy is in accordance with the accuracy specifications provided by the reference station network.

Initialisation

Type	Description
Method	Leica SmartCheck+ technology
Reliability of initialisation	Better than 99.99 %
Time of initialisation	Typically 8 s*
Range	Up to 50 km*

* Might vary due to atmospheric conditions, signal multipath, obstructions, signal geometry and number of tracked signals.

RTK data formats

Formats for data reception:

Leica, Leica 4G, CMR, CMR+, RTCM 2.2, 2.3, 3.0, 3.1, 3.2 MSM

7.9.2 SmartStation Dimensions

SmartStation dimensions

With GS15

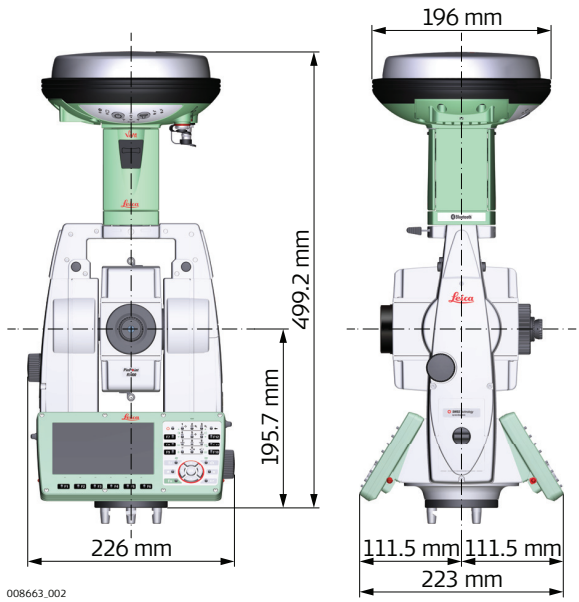

With GS14/GS16

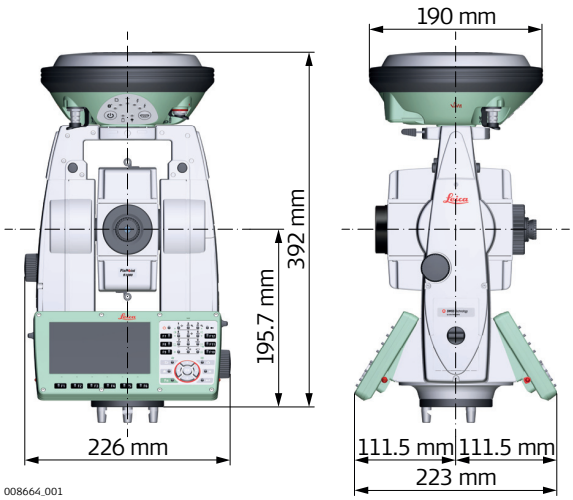

7.10 Laser Guide Technical Data

Concept

- Telescope for dual face measurement
- User adjustment for laser beam

Laser

Type	Description
Type	Visible, red, laser class 3R
Carrier wave	658 nm

Optics

Type	Value
Line of sight offset	52.20 mm
Focussing distance	22.76 mm
Beam angle	0.09 mrad

Power

Type	Value
Power supply	From instrument
Power consumption	ca. 0.2 W

Environmental specifications

Temperature

Operating temperature [°C]	Storage temperature [°C]
-20 to +50	-40 to +70

Range

Type	Value
Daylight	250 m
Darkness	500 m

Beam diameter

The laser beam diameter is influenced by the intensity of the laser guide, by the application distance, by the characteristics of the surface and by the ambient light.

Typical laser beam diameter on white, smooth surfaces with intensity 50% and 100%

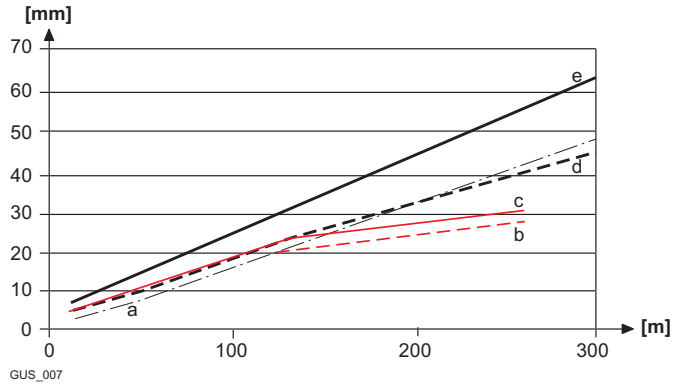

a Theoretical $1/e^2$
b Daylight, intensity 50%
c Daylight, intensity 100%
d Darkness, intensity 50%
e Darkness, intensity 100%

7.11 Conformity to National Regulations

7.11.1 TS16

Conformity to national regulations

- FCC Part 15 (applicable in US)
- Hereby, Leica Geosystems AG declares that the radio equipment type TS16 is in compliance with Directive 2014/53/EU and other applicable European Directives.
  The full text of the EU declaration of conformity is available at the following Internet address: http://www.leica-geosystems.com/ce.

  Class 1 equipment according to European Directive 2014/53/EU (RED) can be placed on the market and be put into service without restrictions in any EEA member state.
- The conformity for countries with other national regulations not covered by the FCC part 15 or European Directive 2014/53/EU has to be approved prior to use and operation.
- Japanese Radio Law and Japanese Telecommunications Business Law Compliance.
  - This device is granted pursuant to the Japanese Radio Law (電波法) and the Japanese Telecommunications Business Law (電気通信事業法).
  - This device should not be modified (otherwise the granted designation number will become invalid).

Frequency band

Type	Frequency Band [MHz]
Bluetooth	2402–2480
WLAN	2400–2473, channel 1–11

Output power

Type	Output Power [mW]
Bluetooth	<10
WLAN (802.11b)	50
WLAN (802.11g)	32

Antenna

Type	Bluetooth	WLAN
Antenna	Integrated antenna	Integrated antenna

Type	Bluetooth	WLAN
Gain [dBi]	0	0
Connector	–	–
Frequency band [MHz]	2400–2500	2400–2500

7.11.2 RadioHandle

Conformity to national regulations

- Hereby, Leica Geosystems AG declares that the radio equipment type RadioHandle is in compliance with Directive 2014/53/EU and other applicable European Directives.
  The full text of the EU declaration of conformity is available at the following Internet address: http://www.leica-geosystems.com/ce.

  CE Class 1 equipment according to European Directive 2014/53/EU (RED) can be placed on the market and be put into service without restrictions in any EEA member state.
- The conformity for countries with other national regulations not covered by the European Directive 2014/53/EU has to be approved prior to use and operation.

Frequency band

Type	Frequency Band [MHz]
RH16	Limited to 2402 - 2480
RH17	Limited to 2402 - 2480

Output power

Value
< 100 mW (e. i. r. p.)

Antenna

Type	λ/2 dipole antenna
Gain [dBi]	2
Connector	Special customized SMB

7.11.3 LOC8 Theft Deterrence and Location Device (optional)

Conformity to national regulations

- FCC Part 15, 22 and 24 (applicable in US)
- Hereby, Leica Geosystems AG declares that the radio equipment type LOC8 is in compliance with Directive 2014/53/EU and other applicable European Directives.
  The full text of the EU declaration of conformity is available at the following Internet address: http://www.leica-geosystems.com/ce.

  CE Class 1 equipment according to European Directive 2014/53/EU (RED) can be placed on the market and be put into service without restrictions in any EEA member state.
- The conformity for countries with other national regulations not covered by the FCC part 15, 22 and 24 or European Directive 2014/53/EU has to be approved prior to use and operation.

Specific Absorption Rate (SAR)

The product meets the limits for the maximum permissible exposure of the guide-lines and standards which are force in this respect. The product must be used with the recommended antenna. A separation distance of at least 20

centimetres should be kept between the antenna and the body of the user or nearby person within the intended application.

Frequency band

Type	Value
GSM	GSM 900: 880 - 960 MHz GSM 1800: 1710 - 1880 MHz
WCDMA	WCDMA 900: 880 - 960 MHz WCDMA 2100: 1920 - 2170 MHz
WLAN	2.4G Wi-Fi 802.11 b/g/n (20 MHz): 2412 - 2472 MHz 802.11 n (40 MHz): 2422 ~ 2462 MHz
GPS	1.57542 GHz

Output power

Type	Value
GSM	GPRS: Maximal power: 29,13 dBm
WCDMA	Maximal power: 23,58 dBm

Antenna

Type	Antenna	Gain
GSM	Internal PIFA antenna	GSM 900: 0.23 dBi GSM 1800: 0.23 dBi
WCDMA	Internal antenna	WCDMA 900: 1.34 dB WCDMA 1200: 1.34 dBi
GPS	Internal antenna	0 dBi
WLAN	Internal PIFA antenna	–0.66 dBi

7.11.4 Dangerous Goods Regulations

Dangerous Goods Regulations

Many products of Leica Geosystems are powered by Lithium batteries.

Lithium batteries can be dangerous under certain conditions and can pose a safety hazard. In certain conditions, Lithium batteries can overheat and ignite.

☞ When carrying or shipping your Leica product with Lithium batteries onboard a commercial aircraft, you must do so in accordance with the **IATA Dangerous Goods Regulations**.

☞ Leica Geosystems has developed **Guidelines** on “How to carry Leica products” and “How to ship Leica products” with Lithium batteries. Before any transportation of a Leica product, we ask you to consult these guidelines on our web page (http://www.leica-geosystems.com/dgr) to ensure that you are in accordance with the IATA Dangerous Goods Regulations and that the Leica products can be transported correctly.

☞ Damaged or defective batteries are prohibited from being carried or transported onboard any aircraft. Therefore, ensure that the condition of any battery is safe for transportation.

System accuracy

Several factors can influence the accuracy of the system for determining the location of a prism:

- Internal ATRplus accuracy
- Angular accuracy of the instrument
- Type and centring accuracy of the prism
- Selected EDM measuring program
- External measuring conditions

Therefore, the overall pointing accuracy of the determined point location can be lower than the given angular accuracy and the ATRplus accuracy.

The following paragraphs provide a short overview of these influencing factors and their possible intensities.

Angular accuracy

The accuracy of angular measurements depends on the instrument type. The angular accuracy for total stations is typically in the range from 0.5″ to 5″. The resulting error depends on the measurement distance.

Angular accuracy	Possible deviation* at 100 m distance
1″	~0.5 mm
3″	~1.5 mm

* Orthogonal to the line of sight.

☞ Refer to the data sheet of the respective instrument model for information about the angular accuracy.

EDM accuracy

The distance measurement accuracy consists of two parts: a fixed value and a distance-dependent value (ppm-value).

Example: "Single measurements: 1 mm + 1.5 ppm"

The EDM accuracies for prism and reflectorless measurements can differ. Additionally, the accuracies can differ depending on the used technologies.

☞ Refer to the appropriate data sheet for information about the EDM accuracy.

ATRplus accuracy

Automatic target aiming accuracies, like those of the ATRplus, are in general the same as the stated angular accuracy. Therefore these accuracies are also distance-dependent parameters.

External impacts, like heat shimmer, rain (prism surface covered by rain drops), fog, dust, strong background lights, dirty targets, alignment of the targets etc. can have a significant influence on the automated target. In addition, the selected EDM mode affects the ATRplus performance. Under good environmental conditions and with a clean, properly aligned target the accuracy of the automated target aiming is equivalent to the manual target aiming (presumed valid calibration values).

Type and centring accuracy of the prism

The prism centring accuracy depends mainly on the used prism type, for example:

Prism type		Centring accuracy
Leica GPR1	Circular prism	1.0 mm
Leica GPH1P	Precision circular prism	0.3 mm
Leica GRZ122	360° prism	2.0 mm
Leica GRZ4	360° prism	5.0 mm

☞ Refer to the white paper "Leica Surveying Reflectors" for information about the different centring accuracies.

More influencing factors

When determining absolute coordinates, the following parameters can also affect the resulting accuracy:

- Environmental conditions: temperature, air pressure and humidity
- Typical instrument errors, such as horizontal collimation error or index error.
- Proper functioning of laser plummet or optical plummet
- Correct horizontal levelling
- Setup of the target
- Quality of extra equipment, such as tribrach or tripod.

Telescope

Type	Value
Magnification	30 ×
Free Objective aperture	40 mm
Focusing	1.7 m/5.6 ft to infinity
Field of view	1°30′/1.66 gon 2.7 m at 100 m

Compensator

Angular accuracy instrument ["]	Setting accuracy		Setting range	
	["]	[mgon]	[′]	[gon]
1	0.5	0.2	4	0.07
2	0.5	0.2	4	0.07
3	1.0	0.3	4	0.07
5	1.5	0.5	4	0.07

Level

Type	Value
Circular level sensitivity	6′/2 mm
Electronic level resolution	2"
Compensation	Centralised quadruple axis compensation

Keyboard display unit

Type	Description
Display	5" WVGA (800 x 480 pixels), colour, graphics Capable LCD, illumination, touch screen

Type	Description
Keyboard	37 keys Including 12 function keys and 12 alphanumeric keys, illumination
Angle display	360°'", 360° decimal, 400 gon, 6400 mil, V %
Distance display	m, ft int, ft us, ft int inch, ft us inch
Position	Face I: Standard Face II: Optional
Touch screen	Screen protection foil on glass

Instrument ports

Name	Description
Cable	• 5 pin LEMO-0 for power, communication, data transfer. • This port is located at the base of the instrument.
RadioHandle	• Hotshoe connection for RadioHandle and SmartAntenna Adapter with SmartStation. • This port is located on top of Communication side cover.
Bluetooth	• Bluetooth module for communication. • This port is housed within Communication side cover.
USB host port	• USB memory stick port for data transfer.
USB device port	• Cable connections from USB devices for communication and data transfer.
WLAN	• WLAN module for communication. • This port is housed within the Communication side cover.

Pin assignments of the 5 pin LEMO-0 port

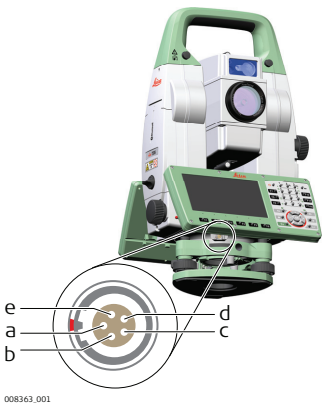

a Pin 1: Power input
b Pin 2: not used
c Pin 3: Single ground
d Pin 4: RxD (RS232, receive data, In)
e Pin 5: TxD (RS232, transmit data, Out)

Instrument dimensions

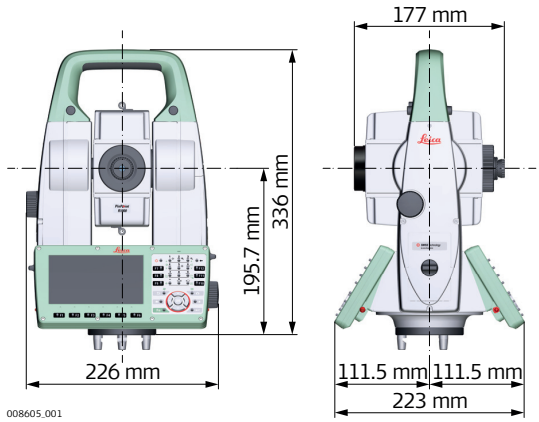

With RH16/RH17

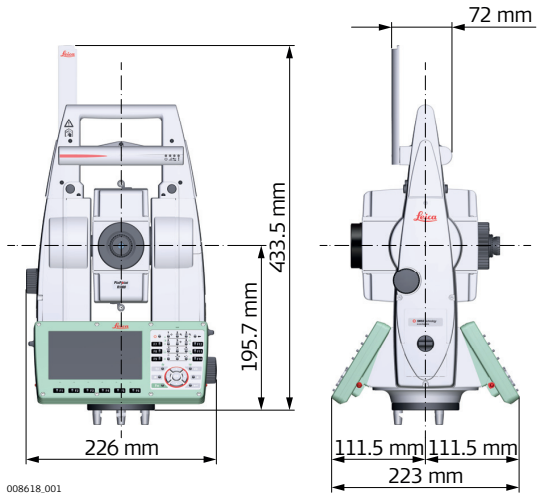

Weight

Type	Value
Instrument	5.1 - 5.8 kg
Tribrach	0.8 kg
Internal battery	0.2 kg

Recording

Data can be recorded onto an SD card or into internal memory.

Type	Capacity [MB]	Number of measurements per MB
SD card	• 1024 • 8192	1750
Internal memory	• 2048	1750

AutoHeight plummet

Type	Description
Type	Visible red laser class 2
Location	In standing axis of instrument
Centering accuracy	Deviation from plumb line: 1.5 mm at 1.5 m instrument height

Type	Description
Diameter of laser point	2.5 mm at 1.5 m instrument height
Height accuracy[1,2]	1.0 mm
Measurement range[3]	0.7 m to 2.7 m
Measurement time, typically	< 3 s

1 Standard deviation (1 sigma) over measurement range

2 Object in shade, sky overcast, Kodak Grey Card (18% reflective), balanced tribrach foot screws

3 Instrument height from tilting axis

☞ Avoid dirt on cover glass.

☞ Avoid line-of-sight obstructions. The full spot needs to be on target.

☞ For best performance use the new Leica tripods. For older tripods, an upgrade of the screw is recommended.

Laser plummet

Type	Value
Type	Visible red laser class 2
Location	In standing axis of instrument
Accuracy	Deviation from plumb line: 1.5 mm (2 sigma) at 1.5 m instrument height
Diameter of laser point	2.5 mm at 1.5 m instrument height

Drives

Description
Endless horizontal and vertical drives

Motorisation

Type	Description
Maximum rotating speed	50 gon/s

Power

Type	Description
External supply voltage	Nominal voltage 12.8 V DC, Range 11.5 V-13.5 V

Internal battery

Type	Battery	Nominal Voltage	Capacity
GEB222	Li-Ion	7.4 V ⎓	6.0 Ah

External battery

Type	Battery	Voltage	Capacity
GEB371	Li-Ion	13 V	16.8 Ah

Environmental specifications

Temperature

Type	Operating temperature [°C]	Storage temperature [°C]
All instruments	−20 to +50	−40 to +70

Type	Operating temperature [°C]	Storage temperature [°C]
Leica SD cards	–40 to +80	–40 to +80
Battery internal	–20 to +55	–40 to +70

Protection against water, dust and sand

Type	Protection
All instruments	IP55 (IEC 60529)

Humidity

Type	Protection
All instruments	Max 95% non condensing The effects of condensation are to be effectively counteracted by periodically drying out the instrument.

Reflectors

Type	Additive Constant [mm]	ATRplus	PS
Standard prism, GPR1	0.0	yes	yes
Mini prism, GMP101	+17.5	yes	yes
360° prism, GRZ4 / GRZ122	+23.1	yes	yes
360° Mini prism, GRZ101	+30.0	yes	not recommended
Reflector tape S, M, L	+34.4	yes	no
Reflectorless	+34.4	no	no
Machine Automation power prism, MPR122	+28.1	yes	yes

☞ For Machine Control purposes only!

There are no special prisms required for ATRplus or for PS.

Electronic Guide Light EGL

Working range:	5m to 150m (15ft to 500ft)
Position accuracy:	5cm at 100m (1.97" at 330ft)

Automatic corrections

The following automatic corrections are made:

- Line of sight error
- Tilting axis error
- Earth curvature
- Circle eccentricity
- Compensator index error
- Vertical index error
- Standing axis tilt
- Refraction
- ATRplus zero point error

7.13 Scale Correction

Use of scale correction

By entering a scale correction, reductions proportional to distance can be taken into account.

- Atmospheric correction.
- Reduction to mean sea level.
- Projection distortion.

Atmospheric correction ΔD1

The slope distance displayed is correct if the scale correction in ppm, mm/km, which has been entered corresponds to the atmospheric conditions prevailing at the time of the measurement.

The atmospheric correction includes:

- Adjustments for air pressure
- Air temperature
- Relative humidity

For highest precision distance measurements, the atmospheric correction should be determined with an accuracy of 1 ppm. The following parameters must be redetermined:

- Air temperature to 1 °C
- Air pressure to 3 mbar
- Relative humidity to 20%

Air humidity

The air humidity influences the distance measurement if the climate is extremely hot and damp.

For high precision measurements, the relative humidity must be measured and entered along with the air pressure and the temperature.

Air humidity correction

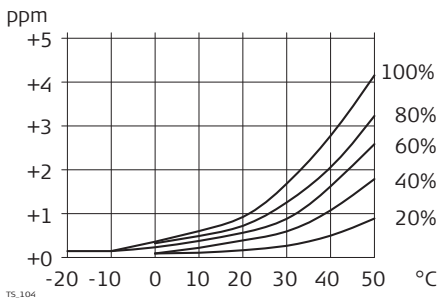

ppm	Air humidity correction [mm/km]
%	Relative humidity [%]
°C	Air temperature [°C]

Index n

Type	Index n	Carrier wave [nm]
Combined EDM	1.0002863	658

The index n is calculated from the formula of the IAG Resolutions (1999), and is valid for:

Air pressure p:	1013.25 mbar
Air temperature t:	12 °C
Relative air humidity h:	60%

Formulas

Formula for visible red laser

$$\Delta D_1 = 286.338 - \left[\frac{0.29535 \cdot p}{(1 + \alpha \cdot t)} - \frac{4.126 \cdot 10^{-4} \cdot h}{(1 + \alpha \cdot t)} \cdot 10^{x} \right]$$

002419_002

ΔD_1	Atmospheric correction [ppm]
p	Air pressure [mbar]
t	Air temperature [°C]
h	Relative humidity [%]
α	$\frac{1}{273.15}$
x	(7.5 * t/(237.3 + t)) + 0.7857

If the basic value of 60 % relative humidity as used by the EDM is retained, the maximum possible error in the calculated atmospheric correction is 2 ppm, 2 mm/km.

Reduction to mean sea level ΔD_2

The values for ΔD_2 are always negative and are derived from the following formula:

$$\Delta D_2 = - \frac{H}{R} \cdot 10^6$$

TS_106

ΔD_2	Reduction to mean sea level [ppm]
H	Height of EDM above sea level [m]
R	6.378 * 10^6 m

Projection distortion ΔD_3

The magnitude of the projection distortion is in accordance with the projection system used in a particular country, for which official tables are generally available. The following formula is valid for cylindrical projections such as that of Gauss-Krüger:

$$\Delta D_3 = \frac{X^2}{2R^2} \cdot 10^6$$

TS_107

ΔD_3	Projection distortion [ppm]
X	Easting, distance from projection zero line with the scale factor 1 [km]
R	6.378 * 10^6 m

In countries where the scale factor is not unity, this formula cannot be directly applied.

Atmospheric corrections °C

Atmospheric corrections in ppm with temperature [°C], air pressure [mb] and height [m] at 60% relative humidity.

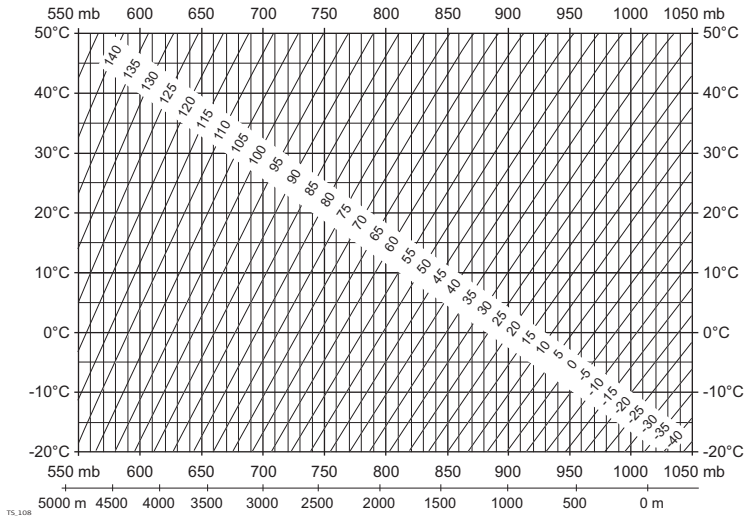

Atmospheric corrections °F

Atmospheric corrections in ppm with temperature [°F], air pressure [inch Hg] and height [ft] at 60% relative humidity.

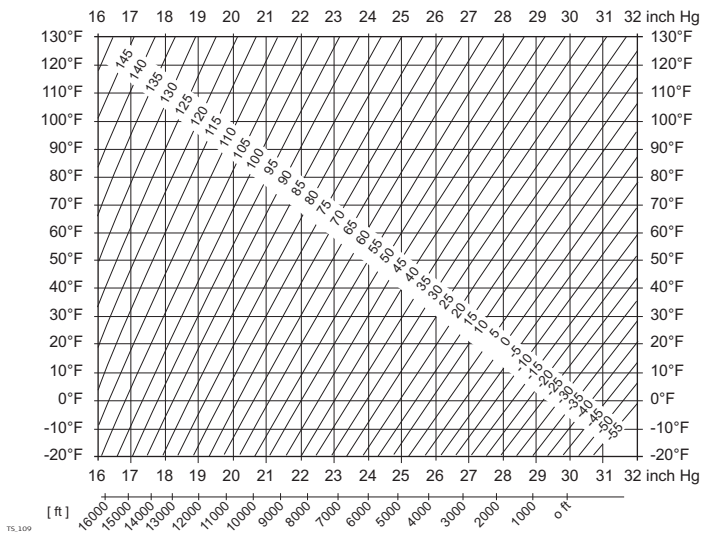

Formulas

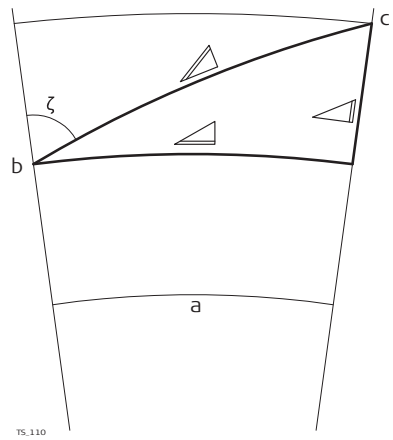

a Mean Sea Level
b Instrument
c Reflector

◿ Slope distance
◿ Horizontal distance
◿ Height difference

The instrument calculates the slope distance, horizontal distance, height difference in accordance with the following formulas:

$$◿ = D_0 \cdot (1 + ppm \cdot 10^{-6}) + AC$$

002425_002

◿	Displayed slope distance [m]
D_0	Uncorrected distance [m]
ppm	Atmospheric scale correction [mm/km]
AC	Additive constant of the reflector [m]

$$◿ = Y - A \cdot X \cdot Y$$

TS_112

$$◿ = X + B \cdot Y^2$$

TS_113

◿	Horizontal distance [m]
◿	Height difference [m]
Y	◿ * |sinζ|
X	◿ * cosζ
ζ	Vertical circle reading
A	$(1 - k / 2) / R = 1.47 * 10^{-7}$ [m^{-1}]
B	$(1 - k) / (2 * R) = 6.83 * 10^{-8}$ [m^{-1}]
k	0.13 (mean refraction coefficient)
R	$6.378 * 10^6$ m (radius of the earth)

Earth curvature (1/R) and mean refraction coefficient (k) are automatically taken into account when calculating the horizontal distance and height difference. The calculated horizontal distance relates to the station height and not to the reflector height.

Reflector types

The reduction formulas are valid for measurements to all reflector types:

- To prisms
- To reflector tape
- Reflectorless measurements

Formulas

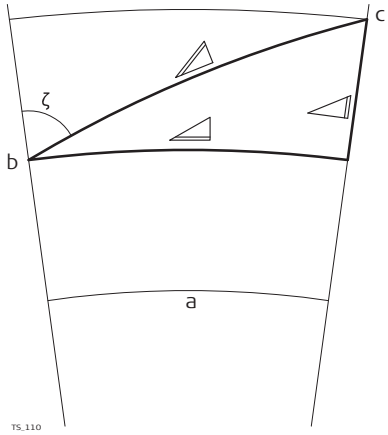

a Mean Sea Level
b Instrument
c Reflector

◿ Slope distance
◿ Horizontal distance
◿ Height difference

The instrument calculates the slope distance, horizontal distance, height difference in accordance with the following formulas:

$$◿ = D_0 \cdot (1 + ppm \cdot 10^{-6}) + AC$$

002425_002

◿	Displayed slope distance [m]
D_0	Uncorrected distance [m]
ppm	Atmospheric scale correction [mm/km]
AC	Additive constant of the reflector [m]

$$◿ = Y - A \cdot X \cdot Y$$

TS_112

$$◿ = X + B \cdot Y^2$$

TS_113

◿	Horizontal distance [m]
◿	Height difference [m]
Y	◿ * |sinζ|
X	◿ * cosζ
ζ	Vertical circle reading
A	$(1 - k / 2) / R = 1.47 * 10^{-7}$ [m^{-1}]
B	$(1 - k) / (2 * R) = 6.83 * 10^{-8}$ [m^{-1}]
k	0.13 (mean refraction coefficient)
R	$6.378 * 10^6$ m (radius of the earth)

Earth curvature (1/R) and mean refraction coefficient (k) are automatically taken into account when calculating the horizontal distance and height difference. The calculated horizontal distance relates to the station height and not to the reflector height.

Distance measuring program Averaging

In the distance measuring program Averaging, the following values are displayed:

D	Slope distance as arithmetic mean of all measurements
s	Standard deviation of a single measurement
n	Number of measurements

These values are calculated as follows:

$$\bar{D} = \frac{1}{n} \cdot \sum_{i=1}^{n} D_i$$

TS_114

$\bar{D}$	Slope distance as arithmetic mean of all measurements
$\sum$	Sum
D_i	Single slope distance measurement
n	Number of measurements

$$s = \sqrt{\frac{\sum_{i=1}^{n} (D_i - \bar{D})^2}{n - 1}} = \sqrt{\frac{\sum_{i=1}^{n} D_i^2 - \frac{1}{n} \left(\sum_{i=1}^{n} D_i \right)^2}{n - 1}}$$

TS_115

s	Standard deviation of a single slope distance measurement
$\sum$	Sum
$\bar{D}$	Slope distance as arithmetic mean of all measurements
D_i	Single slope distance measurement
n	Number of distance measurements

The standard deviation $s_{\bar{D}}$ of the arithmetic mean of the distance can be calculated as follows:

$$s_{\bar{D}} = \frac{s}{\sqrt{n}}$$

TS_116

$s_{\bar{D}}$	Standard deviation of the arithmetic mean of the distance
s	Standard deviation of a single measurement
n	Number of measurements

8 Software Licence Agreement/Warranty

Software Licence Agreement

This product contains software that is preinstalled on the product, or that is supplied to you on a data carrier medium, or that can be downloaded by you online according to prior authorisation from Leica Geosystems. Such software is protected by copyright and other laws and its use is defined and regulated by the Leica Geosystems Software Licence Agreement, which covers aspects such as, but not limited to, Scope of the Licence, Warranty, Intellectual Property Rights, Limitation of Liability, Exclusion of other Assurances, Governing Law and Place of Jurisdiction. Please make sure, that at any time you fully comply with the terms and conditions of the Leica Geosystems Software Licence Agreement.

Such agreement is provided together with all products and can also be referred to and downloaded at the Leica Geosystems home page at http://leica-geosystems.com/about-us/compliance-standards/legal-documents or collected from your Leica Geosystems distributor.

You must not install or use the software unless you have read and accepted the terms and conditions of the Leica Geosystems Software Licence Agreement. Installation or use of the software or any part thereof, is deemed to be an acceptance of all the terms and conditions of such Licence Agreement. If you do not agree to all or some of the terms of such Licence Agreement, you must not download, install or use the software and you must return the unused software together with its accompanying documentation and the purchase receipt to the distributor from whom you purchased the product within ten (10) days of purchase to obtain a full refund of the purchase price.

Open Source information

The software on the product may contain copyright-protected software that is licenced under various open source licences.

Copies of the corresponding licences

- are provided together with the product (for example in the About panel of the software)
- can be downloaded on http://opensource.leica-geosystems.com

If foreseen in the corresponding open source licence, you may obtain the corresponding source code and other related data on http://opensource.leica-geosystems.com.

Contact opensource@leica-geosystems.com in case you need additional information.

819218-4.1.0en

Original text (819218-4.1.0en)
Published in Switzerland
© 2020 Leica Geosystems AG, Heerbrugg, Switzerland

Leica Geosystems AG

Heinrich-Wild-Strasse
CH-9435 Heerbrugg
Switzerland
Phone +41 71 727 31 31

www.leica-geosystems.com

PART OF HEXAGON

- when it has to be **right**

Leica Geosystems